02°2015

techmag°

Technology by ebm-papst

°04 Compact, quiet and reliable: **Induced draft** fans for optimised biomass heating

°08 Powerful, reliable and application-specific: **Modular fans and drives** for medical technology

°12 New **EC fans** for retrofitting in air conditioning systems: The easy way to replace “old” with “highly efficient”

°18 **Compact power-variable fan**: Efficient cooling of hot spots made easy

°22 Compact **EC motors** for fans and blowers: The future of refrigeration, air conditioning and building systems

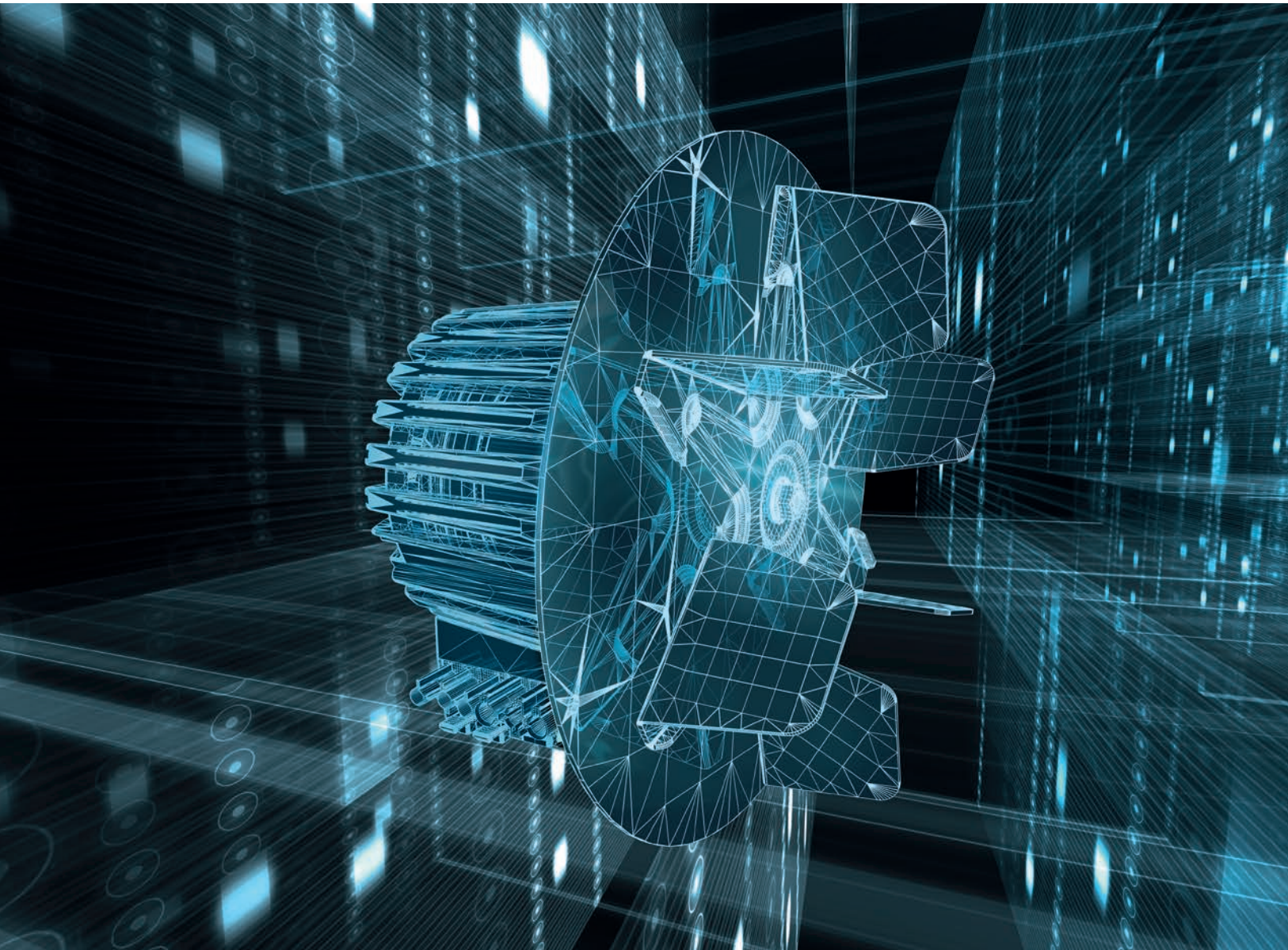

04 INDUCED DRAFT

08 MEDICAL TECHNOLOGY

techmag°

02°2015

COMPACT FAN 18

12 RADIFIT

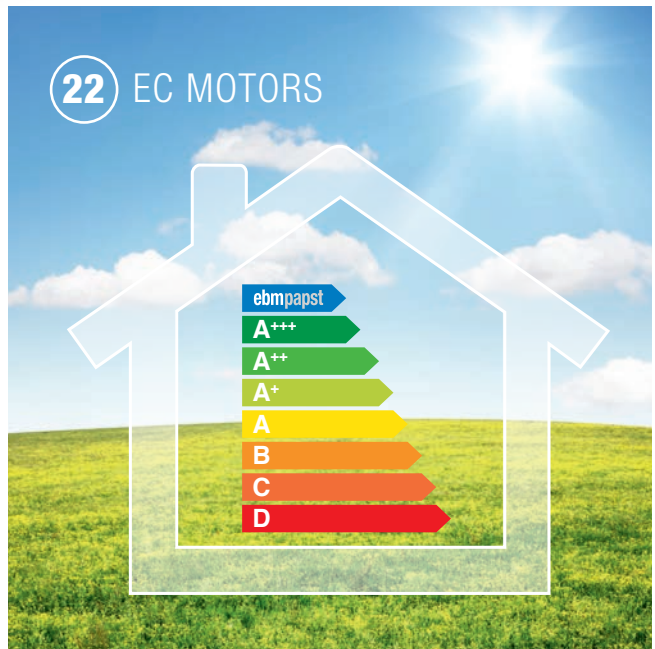

22 EC MOTORS

“Does innovative technology have to be expensive?”

Energy efficiency and material efficiency are fixed global objectives for the future. The second stage of the ErP directive has been in force in Europe since the beginning of the year, but standards and efficiency goals have also been set down outside Europe as well. Whilst ebm-papst once played a pioneering role in this development, the idea has now spread throughout all areas of fan technology. Our AC motor ranges, led by the flagship “68” model, have since been joined by the mechanically compatible GreenTech EC motor ranges. These provide our customers with an easy way of converting their applications from conventional AC to energy-efficient GreenTech EC technology.

Innovations in product development have vastly improved the material and resource efficiency of our products. Technologies such as composite materials and hybrid structures have been created and introduced into series manufacture. Our modular product ranges offer customers even greater benefits such as “Plug & Play” connection, reduced assembly costs and the avoidance of efficiency losses and noise emissions resulting from maladjusted motor-impeller-nozzle combinations. They include products from our RadiFit and pellet stove fan ranges.

Consideration of the motor efficiency and fan aerodynamics incidentally also reveals great potential in terms of unique selling propositions. Our engineers can still find plenty of scope for innovation in the areas of aerodynamic efficiency and aeroacoustics. To further enhance this “best available technology” in customer applications it is important to focus on the system as a whole, in other words the “customer device”. Replacing AC components with EC components (e.g. compressor, fan, pump,…) on a 1:1 basis generally makes the system more expensive, as electronics are required in addition to the “motor” as drive component.

Overall consideration of all the components in the system and the creation of a combined electronic and mechanical assembly are necessary to be able to eliminate redundancy through the use of suitable individual components with an appropriate design. It is then possible to reduce the total costs of the customer device. The full expertise of ebm-papst in all key technical areas – motor technology, aerodynamics and electronics – is called upon to put this next evolutionary step into practice.

We offer our customers expert support to help optimise their devices in terms of aerodynamics, aeroacoustics and EMC when using our products. We work out the best possible solutions together with our customers.

I hope you will enjoy reading the latest edition of the tech.mag.

Gunter Streng,
Head of Development Product Division A
at ebm-papst Mulfingen GmbH & Co. KG

Compact, quiet and reliable

Induced draft fans for optimised biomass heating

Economical heating, environmentally friendly combustion technology and convenient operation are the main requirements for heating systems in private homes today, so systems using wood pellets, wood chips and split logs are used in a variety of situations. They can be used within living areas or for central heating in single- or multi-family homes as well as public buildings. Compact dimensions and quiet operation are important considerations. After all, nobody wants environmentally friendly heating to come at the expense of living comfort. Fans for fresh air and exhaust gases play an important role here and need to deliver convincing performance in terms of energy efficiency, noise, reliability and compactness.

Modern biomass heating systems are enjoying increasing popularity. They can be operated with pellets, wood chips or split logs – renewable energy sources with carbon-neutral combustion. Such systems are comparable to oil and gas systems in terms of operation and maintenance. They have low emissions and reach efficiencies of over 90% (even as much as 105% Hi for condensing boilers). To optimise the efficiency while minimising the pollutant content of the exhaust gases, modern systems control the combustion process with either a temperature or combustion chamber sensor or a lambda probe, typically in combination with an induced draft fan (Figure 1). The fan's speed is controlled based on the measured values or in accordance with a specific set of parameters to ensure an appropriate flue draft, so the fan makes an essential contribution to clean, high-quality combustion.

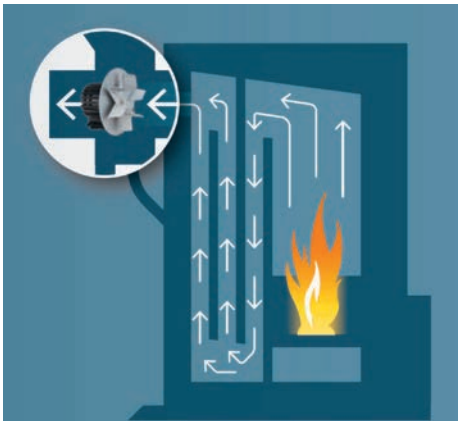

Figure 1: Schematic diagram showing operation of a biomass solid fuel heating unit with speed-controlled induced draft fan assisting the flue draft for optimum combustion.

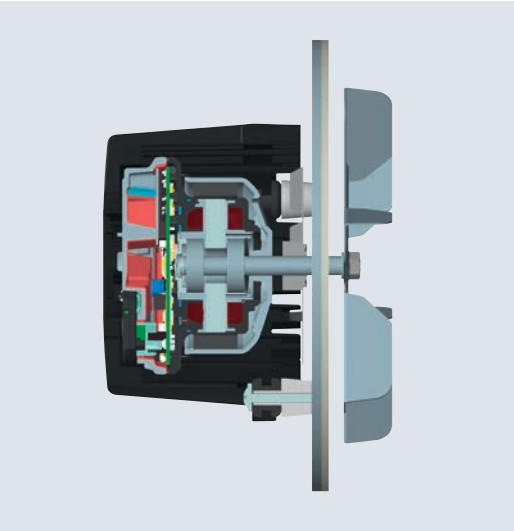

Figure 3 (left): Mechanical design of external rotor motor, with commutation electronics situated in the cool region at a distance from the combustion chamber.

Figure 4 (right): EC fans are much more efficient than conventional AC designs, especially in the partial-load range.

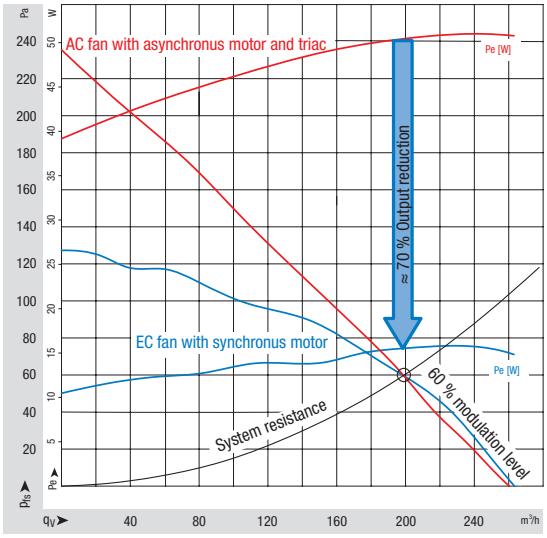

Figure 2: New-generation induced draft fan with energy-efficient EC technology.

External rotor design for compact dimensions The demands placed on induced draft fans are particularly high. They have to withstand high temperatures and be quiet, energy-efficient and easy to integrate. This is particularly the case when they are used in heating systems for living areas, but even when they are installed in central heating systems, induced draft fans should take up as little space as possible.

For the latest generation (Figure 2) of induced draft fans, the motor and fan specialist ebm-papst Mulfingen employs the proven external rotor design. Here the static part of the motor, the stator, is located on the inside and is surrounded by the rotating part, the rotor. Simply by using this configuration, a higher torque can be achieved than with an internal rotor motor of the same length and using the same magnet system. So for a given output, external rotor motors can be much more compact. In combination with the fan, the result is a compact unit that is also rugged and durable.

AC or EC motor? For the new induced draft fans, users can choose between conventional asynchronous (AC) motors and electronically commutated (EC) synchronous motors. However, for controlled fans the choice will nearly always be in favour of the energy-saving EC technology. For asynchronous motors, the maximum speed is limited by the mains frequency. The rotor speed adapts to the rotating field frequency via slip depending on the load situation. As an alternative, speed control via frequency change or phase control is also possible. However, this requires external control electronics and an additional Hall sensor in the motor for speed measurement. Since the efficiency of AC motors decreases sharply in closed-loop operation, much more efficient induced draft fans can be produced using EC motors. EC fans consume up to 70% less energy in partial-load operation, resulting in reduced operating costs and environmental impact and making energy-saving fans and environmentally friendly heating an excellent combination.

EC technology: energy-efficient and quiet In an EC motor, the rotor with its permanent magnets rotates synchronously with the stator's rotating field (Figure 3). In contrast to the mains-powered asynchronous motor, the rotor speed is not automatically coupled to the frequency of the supply voltage but is pre-determined by the commutation electronics, which determine the angular speed of the stator rotating field with which the rotor synchronously rotates.

The commutation electronics determine the rotor position in part without sensors by using the parameters rotor voltage or motor current. The idle speed depends on the applied voltage and the number of turns in the stator winding, making nearly any operating speed possible without slip (synchronously with the stator's rotating field) and, in contrast to the mains-powered asynchro-

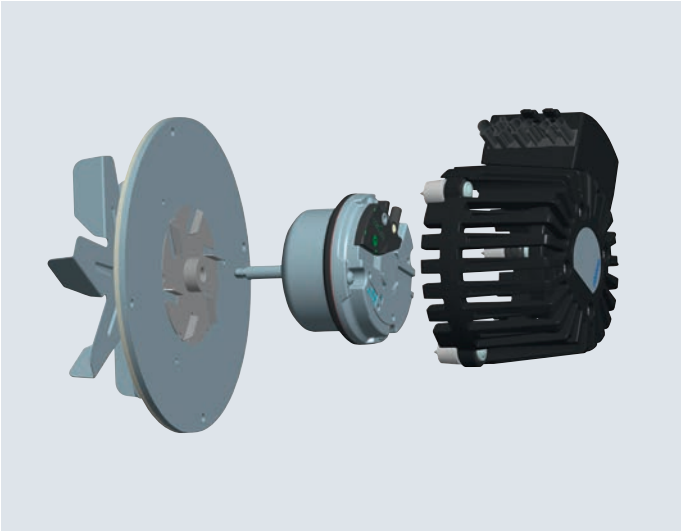

Figure 5 : Modular design of the new induced draft fans: Both an electronically commutated (EC) synchronous motor with direct mains supply or direct current (DC) supply and a conventional AC motor with the same dimensions can be used.

nous motor, even above the mains frequency. In addition, the minimum speed that can be reached with an EC motor is lower than that for an AC motor. So the speed can always be adjusted over a wider control range to meet current requirements. Furthermore, in partial-load operation in particular but at full load as well, EC motors are considerably more efficient than mains-powered AC motors (Figure 4) and are very quiet in comparison with speed-controlled asynchronous motors, whose triac controllers can cause objectionable noise.

New mechanical design with extra benefits

Mechanically, the new induced draft fans feature a modular design that permits the use of both conventional AC and energy-efficient EC motors with identical external dimensions (Figure 5). The EC motor was designed so that the electronics integrated in the motor are situated in the cool region as far as possible from the hot combustion chamber to protect the electronic components from the unavoidably high temperatures there. The insulated, customer-specific mounting plate with adjacent cooling wheel also helps to protect the electronics. Long-term testing has confirmed that temperatures of 250 °C have no detrimental effect on functionality over time; the induced draft fans are even designed for brief temperature peaks up to 300 °C. The stainless steel impellers are available in different designs with diameters from 120 mm to 250 mm. An optional shaft seal developed for these fans prevents flue gas from leaking through the shaft gap. This is important since ventilation systems in living areas can cause underpressure which results in flue gas being sucked into the room. Sealed stoves with an external air supply are mandatory here.

The mechanical design has further advantages. The induced draft fan's hood is made of a very tough, temperature-resistant and flame-proof fibreglass-reinforced plastic material. The fan's torsion-resistant hollow ribs provide a sturdy support structure. If an AC motor is used, the terminal box can simply be fastened to the hood. For applications with an existing external power supply, low-voltage DC motors with the same performance data and an identical design will be available in future. ○

Author is Thomas Heli, Head of Development at ebm-papst Mulfingen

You would like more information on this topic? Please address your question to: Gerhard Gauß, Head of Market Management Biomass Heating Systems, Gerhard.Gauss@de.ebmpapst.com

Watch the ebm-papst°TV video at www.ebmpapst.com/wodtke_pellet_heater

Powerful, reliable and application-specific

Modular fans and drives for medical technology

In medical technology, complex devices need to be accommodated in a small space to reduce costs, which calls for special expertise in order to arrive at an ideal system solution: no matter how efficient it is, miniaturised equipment generates waste heat that needs to be dissipated; powerful and durable fans can help here. Also in demand for medical equipment are small but strong drives that can be precisely controlled. A modern operating theatre without such equipment is unthinkable today.

The medical sector relies on a wide range of highly diverse equipment. Advances in electronics have led to significant improvements in diagnosis and methods of treatment, but the electronics are only one component, and an overall design can only be as reliable as the ambient conditions or the other components and the actuating elements permit. Reliable cooling of the electronics or the exact translation of control commands in a drive system are crucial to a device's success. Taking the special needs of medical applications into account, drive and fan specialist ebm-papst has developed a wide range of fans, motors, gearboxes and sensors for most of the requirements of modern medical technology (Figure 1, page 10).

Customised air flow One of the most important characteristics of components used in medical applications is reliability, followed by universal readiness, low noise emissions and rugged design. Since medical equipment is often used worldwide, it needs to work with different mains voltages. Some ebm-papst fan designs offer wide-range voltage inputs for the power supply, making stock-keeping and logistics easier. In addition, their motors and aerodynamics have been optimised for minimum operating noise at maximum capacity. Electronic commutation combined with an external rotor design ensures high efficiency while permitting adaptation of the air flow to match the application. This can result in significant increases in operating time, especially for mobile devices.

All axial, centrifugal and diagonal fans from ebm-papst are designed for years of reliable, low-maintenance operation (Figure 2, page 10). For special cases with extremely high mechanical stress, there are fans with reinforced designs, for example to cool the rotor of a CT scanner with accelerations over 50 times the acceleration of gravity or for use in analysers that need special protection against corrosion. In addition

Figure 1 (left): Product range of modular fans and drives for medical technology.

Figure 2 (right): The 40x40 mm 420 J fan delivers high air performance at a low sound power level and current draw.

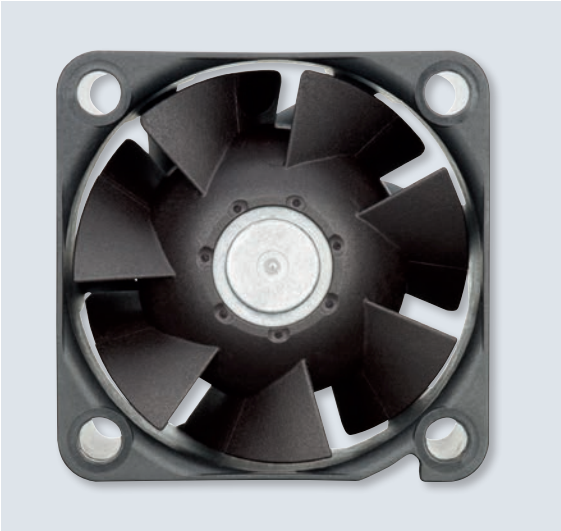

Figure 3: Example showing modular system for custom drive assembly.

to designs with stainless steel bearings, there are other options available such as vacuum-cast windings and electronics, protective varnishing for circuit boards, and many more. External or integrated sensors, as in the Variofan models, automatically regulate the air flow depending on temperature or humidity, making external control unnecessary. Especially dynamic fans with internal rotor motors allow the operation of CPAP machines in the bedroom, ensuring a rapid pressure build-up matching the breathing frequency to fill the lungs – and the units are so quiet that they don't disturb the sleeper.

Custom drive engineering Medical equipment places a wide range of demands on drive technology, but custom-designed drive units are usually expensive. The specialists at ebm-papst decided on a system with modular design, combining the economical mass production of modules with the opportunity for users to combine the modules to make motors that are exactly matched to their applications (Figure 3). To name just one example, the ebm-papst modular range includes integrated K4 electronics for internal and external rotor motors. This means that it is possible to select from a variety of pre-defined operating modes such as speed control, torque control and positioning, as well as to parametrise the motor by way of the RS-485 interface using the free kickstart software for instance. Customers are then able to make settings to suit their particular requirements and ideally adapted to their system. This holistic approach includes not only motors, sensors, gearboxes and brakes but also the controllers and, where required, the complete assembly of all mechanical components to make a module.

At the heart of ebm-papst's drive technology are durable and highly efficient motors that are used in both laboratory equipment and large systems. They can also be found in adjustable operating tables, patient lifts, wheelchair drives and many other applications. In addition to motors with external rotor or highly dynamic internal rotor designs, suitably staged gearboxes are available. With the planetary, crown or spur gear units from ebm-papst ZEITLAUF, the modular system offers the ideal solution for every application. Complete drive systems can be built from a single source, with none of the expenses and delays resulting from the coordination of multiple suppliers. And of course the proven customised OEM drive solutions with specially developed components are available on request.

The manufacturer's expertise accommodates the wide range of requirements. The peculiarities of medical technology are familiar from years of experience and are incorporated into development. Thus drive development can be planned faster or assigned to the drive spe-

Figure 4: Quality assurance in in-house test labs.

cialists; the manufacturer can concentrate on its core business, saving time and money. This is in accordance with the orientation of development and production as well as the corporate philosophy regarding quality, personnel, logistics and processes.

100 percent quality testing Although all products and production processes have been optimised for maximum quality, all drives or fans in the production line undergo a complete final inspection according to the applicable medical test requirements. We satisfy the quality and environmental standards specified by ISO/TS 16949, DIN EN ISO 9001 and DIN EN ISO 14001 and are thus qualified to meet the exacting demands of customers in the medical engineering and laboratory sectors. All of the necessary equipment is available in in-house test labs (Figure 4), so the components, which have been developed with state-of-the-art computer programs, can be subjected to real-world testing as well as simulations. The test results go into the development of future components. to ensure perfectly matched and highly reliable products. From an environmental point of view, the medical components also score well: In accordance with the company's Green-Tech philosophy, they are produced with as little energy and material as possible and are of course soldered without lead. In operation, the drives' high efficiency and low energy consumption complement the thrifty use of resources by the fans and drives.

The modular system offers the ideal solution for every application.

Author is Philipp Rauch, Market Manager Industrial Drives at ebm-papst St. Georgen

You would like more information on this topic? Please address your question to: Philipp.Rauch@de.ebmpapst.com

Watch the ebm-papst°TV video at www.ebmpapst.com/emc

New EC fans for retrofitting in air conditioning systems

The easy way to replace “old” with “highly efficient”

Compact fan dimensions are highly desirable for all ventilation and air conditioning applications. After all, installation space always tends to be at a premium. Energy efficiency is also an important aspect, not least because of the need to meet the minimum requirements set down by the Ecodesign regulation, which came into force for fans in 2015. Modern fans featuring energy-saving EC technology have plenty to offer in this respect: The compact fans do not just satisfy currently applicable and future requirements, they already clearly surpass them. This is of equal benefit to both the environment and customers, particularly as new concepts make retrofitting a simple matter for air conditioning unit manufacturers without the need for any design modifications.

At present, the fans of ventilation and air conditioning units are often powered by asynchronous motors which drive the impeller by way of a belt. Such an arrangement takes up a lot of space inside the air conditioning device and makes installation complicated. The number of wearing parts also creates additional service work in the course of operation. What’s more, this widely

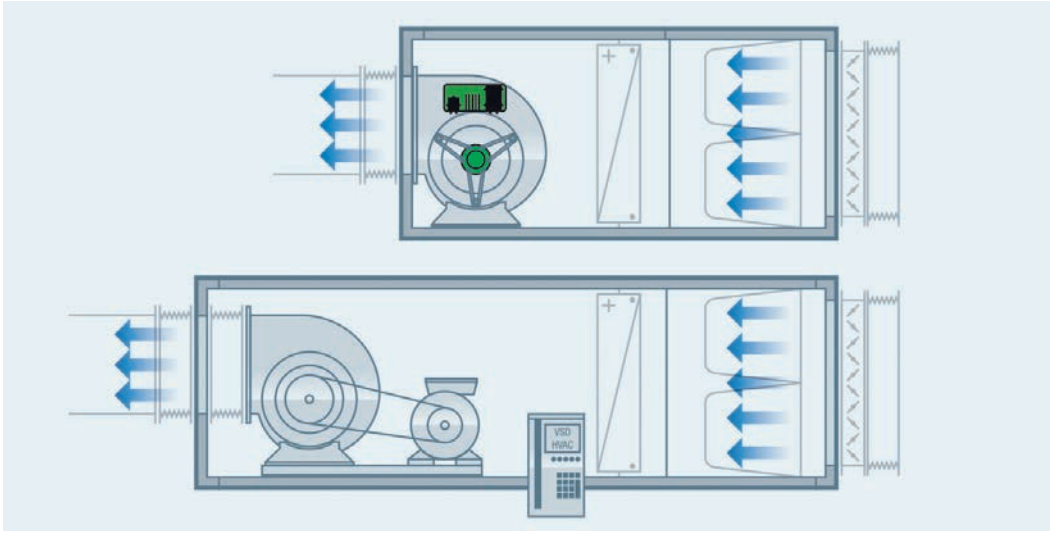

Figure 1: The RadiFit EC fan (top) shown here in a block diagram of a suction chamber is of unbeatable compact design. The illustration below shows a belt-driven fan with frequency converter.

Retrofitting is no problem with the new RadiFit product range.

used concept is not ideal in terms of hygiene, as belt abrasion can have a detrimental effect on the air quality. Another drawback to this constellation is that it is difficult to satisfy the demands for optimum utilisation of the primary energy supplied. In addition, the efficiency of asynchronous drives leaves something to be desired, with a level of between 20% and 70% depending on the shaft power. Speed control – for demand-based power adjustment or noise reduction for example – can only be implemented with the use of additional components such as frequency converters.

Direct-drive EC fans Given these factors, direct-drive EC fans are an excellent alternative. EC motors exhibit the same characteristics as DC motors, can be just as easily regulated and attain efficiency levels of up to 90%. As well as making better use of the primary energy, another advantage is a reduction in heat loss during operation which has a positive effect on the service life of the ball bearings employed. A further argument in favour of using EC fans in ventilation and air conditioning devices is their compact external rotor design. The electronically commutated motor is integrated directly into the impeller, thus significantly reducing the installation dimensions (Figure 1). There is no need for a belt drive between motor and fan or a frequency converter. Thanks to EC technology, new air conditioning devices are more compact and so require less space at the installation location. It is however possible to put the energy-saving technology to good use in existing designs as well. Retrofitting, in other words replacing “old” with “energy-efficient”, is now no problem, as ebm-papst proves with the new RadiFit product range (Figure 2).

Energy-saving technology in the scroll housing The double-flow centrifugal fan product range with backward-curved blades in the scroll housing was designed as an energy-saving system concept for any number of applications in industry and ventilation technology. Depending on the size, this is suitable for air performance levels of up to 10,000 m³/h (Figure 3). Thanks to the high-performance GreenTech EC drives, these centrifugal fans operate with a high degree of efficiency in combination with a high static pressure. The aerodynamically optimised blade

Figure 2: The double-flow centrifugal fan product range in a scroll housing with backward-curved blades, shown here with mounting bracket in 90° position.

channel of the high-performance impeller and the ideally adapted scroll housing play an important part in this respect. The overall effect is a reduction in energy consumption. Practical tests have proven that savings of more than 40% are possible as compared to a conventional cylindrical rotor AC fan with the same air performance. The fans are also extremely quiet-running thanks to the low-noise commutation and dynamic balancing of the impeller rotor unit. The generation of structure-borne noise is minimised, thus reducing the load on the bearings and so helping to extend the service life.

These characteristics offer advantages in a wide range of applications, for example in so-called low-profile air conditioning devices (Figure 4a, page 16) which use the heat of the exhaust air to warm the intake air. To do so, the fans convey the air through the heat exchanger and then through the intake and exhaust air ducts. Compact, energy-efficient EC fans with speed control are ideal for this purpose, particularly in view of the stringent energy conservation regulations applicable in this field. This similarly applies to central air handling units (Figure 4b, page 16), where the fans have to convey the air through filters, heat exchangers or humidifiers and dehumidifiers as well as branched duct systems whilst providing compensation for any loss of pressure. At the same time, the system must be as space-saving as possible and ensure simple, demand-based ventilation for a large number of rooms. Fans do however also have to satisfy similar requirements

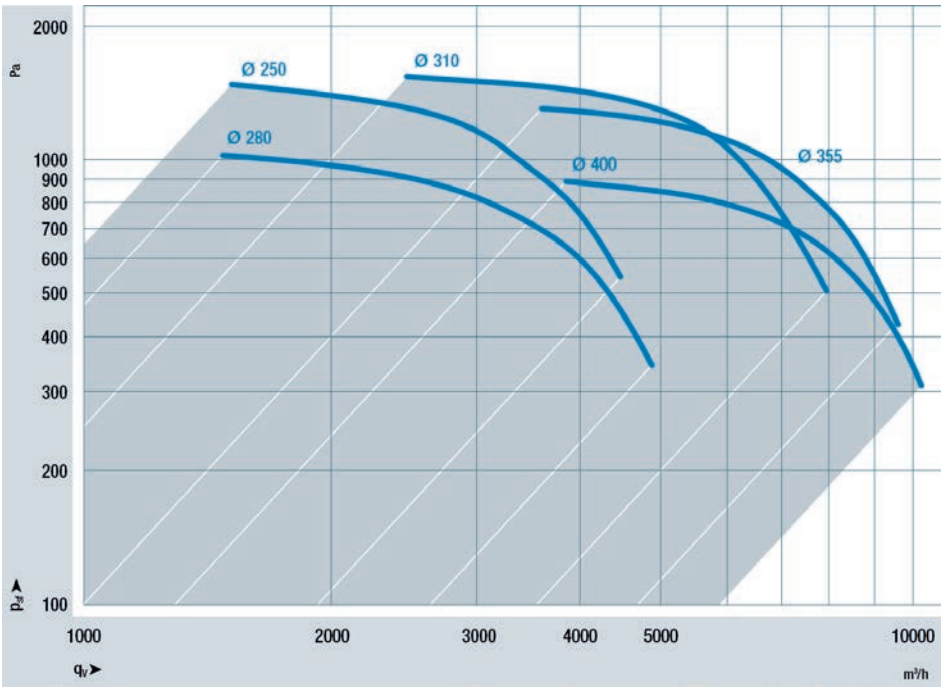

Figure 3: Air performance levels of up to 10,000 m³/h are possible depending on the size.

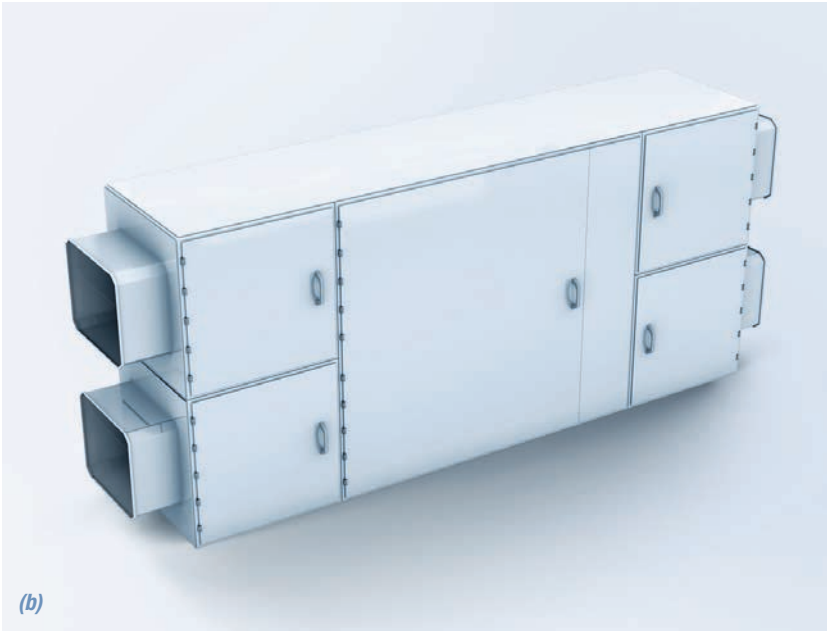

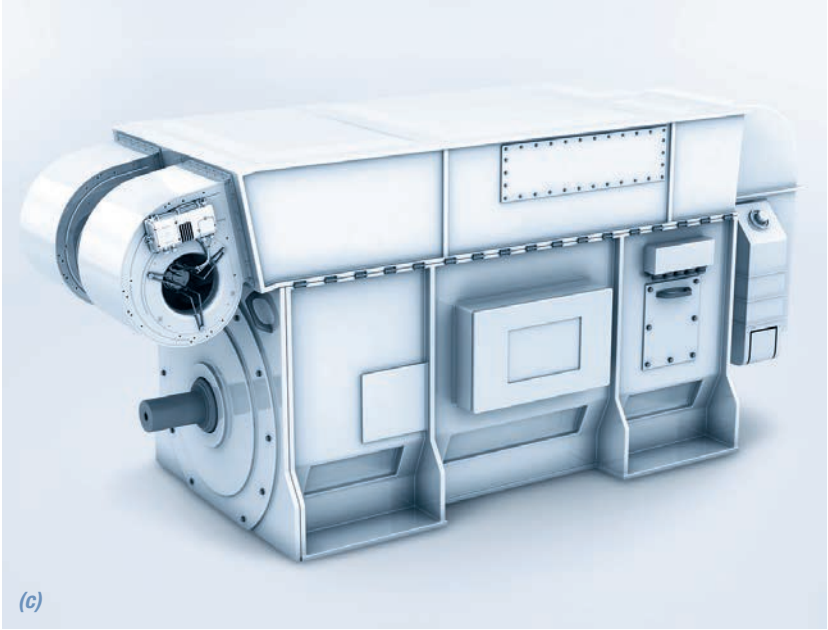

Figure 4: Typical applications include low-profile air conditioning devices (a), central air handling units (b) and generator cooling (c).

Figure 5: The electronics with connection area can be fitted on the right or left of the housing; the user can then turn the connection area itself to the desired position or the cable exit can be fitted facing downwards.

in industrial applications, for generator cooling for instance (Figure 4c). In this case the fan forces the ambient air through narrow ducts at the generator – which is where the new centrifugal fans really come into their own: Thanks to the integrated speed control, cooling can be constantly adapted to suit load and heat generation. And as it does not require separate actuation the fan needs little installation space.

Modular concept with flexible connection options EC centrifugal fans are designed for practical installation and can easily be adapted to different situations. Variable foot positions are possible for the size range 250 to 400 and the fans can also be supplied without a flange. Sizes 310, 355 and 400 are available in the successful cube design. The emphasis was also placed on flexibility with regard to electrical connection. For example the electronics with connection area (Figure 5) can be fitted on the right or left of the housing; the user can then turn the connection area itself to the desired position. The fans are supplied as a complete unit in a housing and wired ready for connection, thus providing customers with a practical Plug & Play package for their air conditioning applications. Being designed for different power supplies and operation in 50 Hz and 60 Hz systems, the fans are suitable for use throughout the world. With the RadiFit product range, an energy-efficient, practical retrofit concept for air conditioning devices is now available with immediate effect. ○

Author is Tobias Ehmann, Head of Development at ebm-papst Mulfingen

You would like more information on this topic? Please address your question to: Uwe Sigloch, Head of Market Management Ventilation and Air-Conditioning, Uwe.Sigloch@de.ebmpapst.com

Compact 40 x 40 mm variable-power fan

Efficient cooling of hot spots made easy

Modern electronic components and assemblies make it possible to achieve a high power density together with a compact design. As a result, more heat does however have to be dissipated from both CPUs and power electronics. Conventional cooling concepts with moderate amounts of air require large heat sinks in such situations and would counteract the desired miniaturisation effect. Active cooling with efficient high-performance fans offers a better alternative for high-performance cooling in data processing systems, inverters and laser devices for example. With an edge length of just 40 mm, such fans convey a powerful flow of air to the hot spot. The high-speed, turbulent flow dissipates heat exactly where it is needed, saving valuable installation space. Intelligent electronic fan control constantly ensures optimum power adjustment and pinpointed variation of the air volume in line with requirements. This reduces both energy consumption and operating noise.

High power combined with a compact design offers a variety of advantages: Users benefit from greater effective power, whilst miniaturisation conserves both resources and the environment. This applies not only to computers and control electronics but also to power components such as transistors, thyristors or diodes in frequency converters, welding appliances or inverters. Increased power and miniaturisation are however unfortunately also accompanied by greater losses in each component. New cooling concepts are called for. Which is why the ebm-papst fan specialists from St. Georgen in the Black Forest

Figure 1 (left): The new compact fan 420J is ideal for hot spot cooling

Figure 2 (right): The complex control board is fully integrated into the fan housing

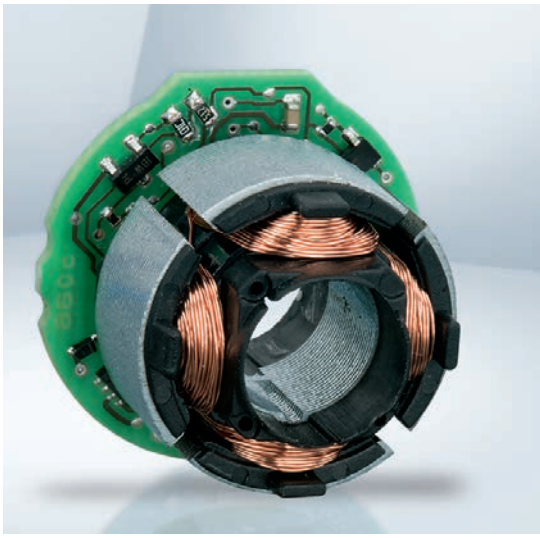

The new fan now attains virtually twice the power of its predecessor.

developed a fan to suit the demands of modern high-performance electronics: The catalogue of requirements included compact dimensions, a very high air conduction rate and pressure increase to be able to provide a sufficient volume of cooling air for even tightly packed components (Figure 1). At the same time the aim was to design a fan which would set new standards in terms of efficiency and variability. This was achieved by developing special control electronics with optimised actuation and a connection for external communication to permit demand-based air volume control.

Compact fan full of expertise With regard to conveying a certain air flow per unit of time, a small cross-section produces a much higher flow velocity than a larger one. In addition, the infeed of energy is required to move gas molecules - a function performed by the blades of the fan rotors. Similarly to a large propeller on an aircraft, a large impeller conveys a large volume at moderate speed and air velocity. By contrast, a higher blade speed and optimised inlet/outlet geometry are necessary for a small fan to convey the same volume of air per unit of time. With a high speed and high air jet velocity, a small, ideally designed rotor can therefore achieve the air performance level of a large fan rotor. The difficult aspect is the optimum interaction of all components. This was where our development experts in the Black Forest were able to draw on their decades of experience.

Two criteria therefore had to be considered for the compact fans with an edge length of 40 x 40 mm and flow rates of nearly 40 m³/h: an aerodynamically optimised design for the rotor and housing and a sufficiently powerful drive system. Ideally, a balance should be achieved between the demands for a high speed in terms of aerodynamics and in relation to the electric drive: Smaller electric motors draw their power from a high speed with a relatively moderate torque. In several stages, the powerful external rotor motor of the fan was ideally adapted to the optimised aerodynamic components. This was so successful that the new fan, designed with the standard 40 x 40 x 28 mm dimensions, now attains virtually twice the power of its predecessor.

Air conduction "On Demand" Intelligent control of the drive system and thus of the air volume must also be possible. For this purpose, the electronically commutated motor is regulated by way of complex control electronics (Figure 2). This permits not only economical, in other words power-saving operation, but also pinpointed air conduction: For instance, the air flow is reduced if a CPU or diode laser is in idle mode, whereas accordingly more cooling air is conveyed if the

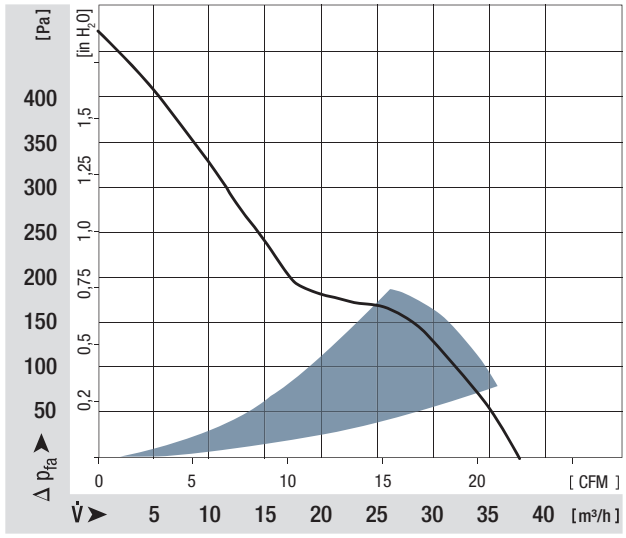

Figure 3: A small fan with a lot to offer - as the air performance diagram shows!

amount of heat to be dissipated increases under load. In addition to lowering the power requirement and noise level, this also extends the service life of the upstream filters for example. All-in-all, the built-in intelligence of the fan drastically cuts the operating costs of the cooling system. Special functions such as a speed signal, a Go/NoGo alarm, an external temperature sensor, a PWM control input and protection against moisture or even salt spray fog extend the range of possible applications beyond the bounds of switch cabinets or computer centres right through to tough industrial environments.

In practice The fans in the 420J series are designed and manufactured to ebm-papst "GreenTech" environmental standards. They have extremely compact dimensions of 40 x 40 x 28 mm. Two versions are available with 12 or 24 VDC nominal voltage. Depending on the model the air flow is between 24 and 38 m³/h with a pressure increase of up to 500 pascal and a power consumption of 2.5 or 7,1 W (Figure 3). The fan is quieter than the old version, with a reduction in sound power level of between 2 and 5 dB(A) depending on the operating point. The small fan weighs only 45 g, as the housing and impeller are made of light, vibration-damping GRP (glass fibre-reinforced plastic) such as PBT (polybutylene terephthalate) or PA (polyamide). The fan is suitable for use over a broad temperature range between -20 and +70 °C. At full load, power consumption is around 70% lower than that of its predecessor. The improved motor efficiency level also has a positive effect in terms of bearing heat generation. Years of operation at a nominal speed of up to 17,200 rpm are thus no problem. The service life (L10) values based on ebm-papst's stringent in-house standard are very high: 75,000 or 32,500 hours for the M-version of the fan at 40°C or 70°C respectively. Employing the usual L10IPC method, the life expectancy of an M-version at 40 °C is around 127,500 hours.

The robust plastics can withstand even tough environmental conditions. An extra-robust version of the fans is also available to provide a broader range of applications extending to industrial equipment and mobile units. In this case the electronics board is encapsulated in polyurethane and the stator is provided with a protective coating for example. This enables the fan to pass the salt spray mist test, qualifying it for use in the tough environment of converters or diode welding systems. O

Authors are Arnold Kuner, Marcel Paffendorf and Boris Serowy at ebm-papst St. Georgen

You would like more information on this topic? Please address your question to: Arnold.Kuner@de.ebmpapst.com

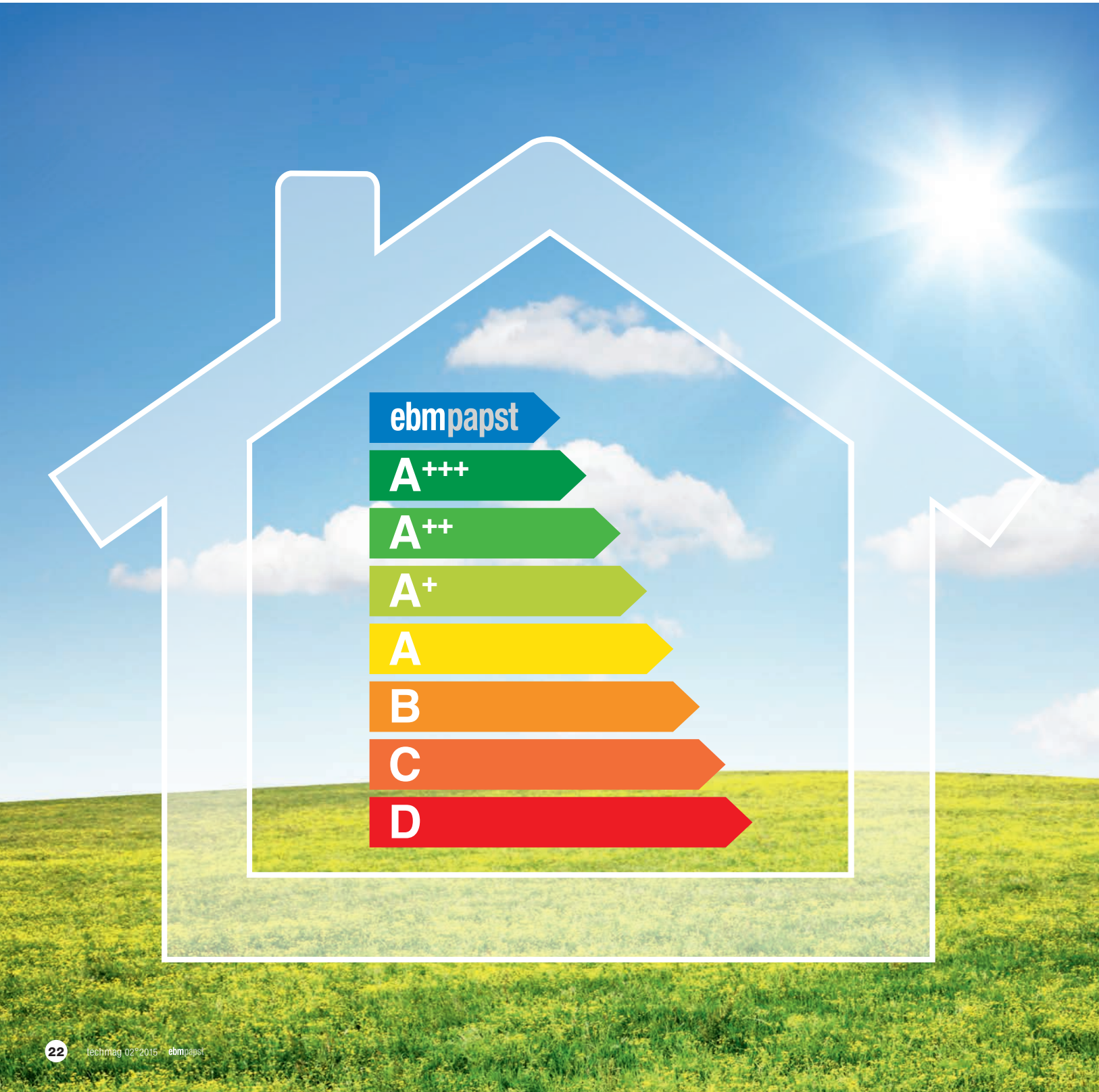
ebmpapst
A+++
A++
A+
A
B
C
D

The future of refrigeration, air conditioning and building systems

Efficient, compact EC motors for high-performance fans and blowers

Society is facing considerable challenges in the light of global warming and world population growth. And so the top priority has to be to reduce energy consumption. According to the WHO there is a direct correlation between world population growth and water consumption, the number of motor vehicles, increasing CO_2 emissions and the demand for electricity. In this context the concept of "efficiency" takes on major significance with a view to accommodating a good deal of the extra energy demand in the future. In the field of refrigeration, air conditioning and building systems, the use of energy-saving drive units for fans and blowers can make a great contribution to such efforts.

The influence of energy-saving fans on energy consumption and CO_2 emissions can best be illustrated by a concrete example: Use is frequently made of asynchronous motors as drive units in refrigeration, air conditioning and building systems. These AC motors are of simple, compact design as they take their supply directly from the AC or three-phase AC network. They do not require any mechanical commutators or elec-

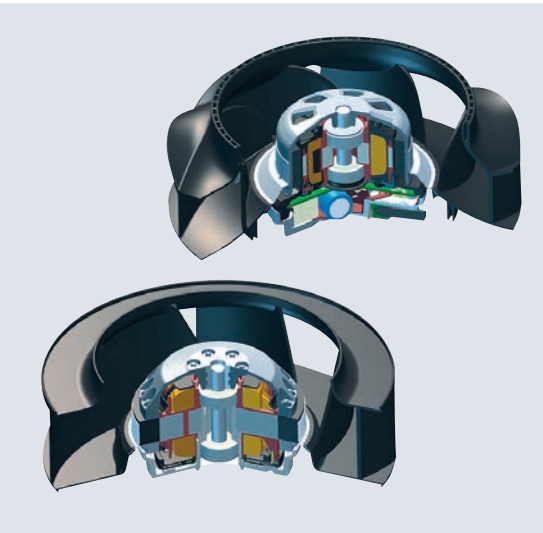

Figure 1 (left): In spite of the integrated commutation and actuation electronics, the new EC motors (on the right) are just as compact as conventional AC motors (on the left), thus permitting simple mechanical exchange.

Figure 2 (right): Mechanical compatibility: The new EC motor (on the left) can be attached in exactly the same way as standard AC motors (on the right).

For the new EC motors, great emphasis was placed on sustainability and the preservation of resources.

tronic components for supplying the rotor. They are both robust and reliable. Their one major drawback is however their comparatively poor efficiency. Particularly in the part load range this is clearly inferior to that of EC motors, which operate at around 70% efficiency. This does of course have an influence on power consumption in virtually all applications.

An impressive set of figures The size 68 AC motor for example, widely used in all manner of applications, provides a very clear example to illustrate the point: Looked at over the past five years and assuming an average power consumption of 150 W and a duty cycle of 75%, the annual energy consumption of the around 25 million AC motors of this type employed as fan drive units in various applications was not far short of 25 TWh (= 25,000,000,000 kWh). That represents more than twice the output of the Neckarwestheim II nuclear power station, which produces about 11.5 TWh per year. Or to put it another way, at least two nuclear power stations are necessary to supply the AC motors used in a five-year period in various fan applications in refrigeration, air conditioning and building systems.

"AC to EC" – exchange made easy It is essential to save some of this energy in the future – and it can be done. Thanks to the development of a new series of EC motors, ebm-papst Mulfingen is now in a position to replace conventional AC motors with highly efficient EC technology with the same mechanical design. It is basically the same process as for old 100 W bulbs. These can replaced by energy-saving lamps which fit in the same holders. The development of EC motors mechanically compatible with AC motors and their extremely compact design does however represent something of a technical challenge.

The EC motor concept is based on synchronous motors with permanent magnet excitation. The magnetic rotor operates in synchronism with an electronically generated rotating field. This makes it possible to achieve any required operating speed irrespective of the mains frequency concerned. Accommodation of the electronics required for EC motors in a confined space (Figure 1) demands a lot of experience and expertise. Mechanical compatibility was also necessary in addition to the miniaturisation and optimisation of the electronics. This included employing the same type of mounting flange as for AC motors (Figure 2) for example, as well as modification of the motor design as a whole.

Good heat dissipation, high degree of protection and sustainable design The results are impressive. The new compact EC motors are based on the successful external rotor principle in

Figure 3: Compact electronics, encapsulated stator and rotor.

which the rotor rotates about the internal stator. A number of practical advantages are gained from the thermoplastic encapsulation of the laminated core of the stator. The high-grade plastic material provides excellent electrical insulation and it is possible to integrate the ball bearing mount. This permits variation of the wall thickness and spacing, making it easy to compensate for laminated core tolerances for example. Finally, the entire wound assembly is encapsulated in thermosetting plastic (Figure 3). The one-piece rotor moving around the stator is of optimum aerodynamic design. Air inlets in the rotor ensure ideal dissipation of the stator heat. In combination with the encapsulated stator the motors have a guaranteed high level of IP protection (IP54). Sealing of the electronics also plays an important role. In contrast to previously used concepts involving a flange and various O-rings, the electronics housing was provided with an elastic sealing component to ensure long-lasting protection of the electronics. The entire motor is robust and shock-proof whilst offering outstanding reliability and a long service life.

When designing and manufacturing the new EC motors, great emphasis was also placed on sustainability and the preservation of resources. This is demonstrated by a variety of details. For instance, the one-piece rotor with press-fitted shaft reduces the number of manufacturing steps and fewer parts are required thanks to the use of multi-function components. The heat dissipation concept and a relatively short core also help to reduce the amount of material. And less material means using less energy in manufacturing.

Convincing practical examples The energy efficiency of EC motors is also associated with other properties which have a positive influence in everyday operation. These include speed control by way of the integrated electronics for example. The speed can thus always be matched to the given requirements. What's more, EC motors are much quieter running than speed-controlled asynchronous motors on account of the noise inevitably generated by the triac or frequency converter control employed by the latter. Other advantages are the high power density, the compact size and the monitoring function which permits interrogation of operating data and statuses at all times.

A variety of applications already implemented provide ample evidence of the environmental, financial and practical benefits to be gained by swapping from AC to EC motors in refrigeration, air conditioning and building systems. One such application is the so-called air curtain. This involves blowers creating an air flow barrier, usually employed to separate warm indoor air from cold outdoor air. EC blowers (Figure 4) operate

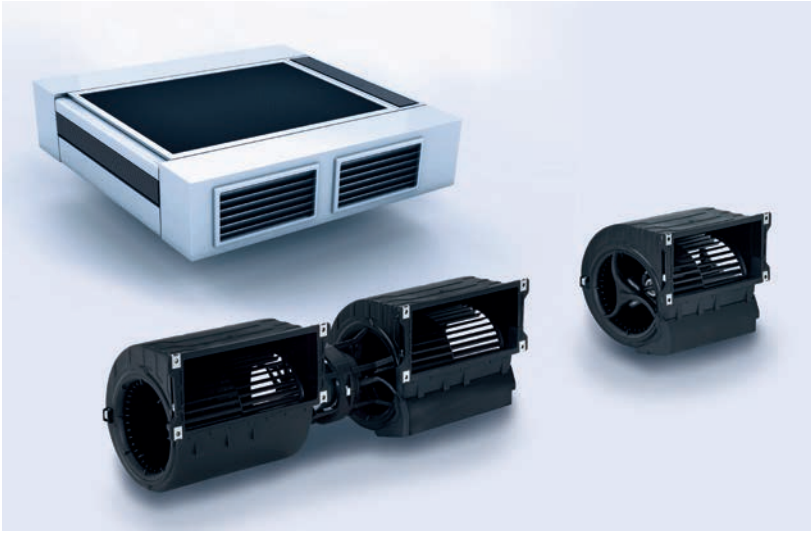

Figure 4: Air curtain: The blowers are constantly in operation; a considerable amount of energy can therefore be saved by switching to EC motors.

with outstanding efficiency and allow adaptation of the flow velocity to suit requirements, e.g. reduction when the door is closed, switching between winter and summer mode and day/night-time settings. The low noise level is a further positive feature.

This applies similarly to the evaporator unit fans used around the world in refrigeration systems, for instance to transmit heat in cold storage areas (Figure 5). As such systems operate with a high duty cycle, power consumption can be considerably reducing by employing EC motors. And the AxiCool range of EC fans designed specially for this sort of application has even more advantages to offer: They are able to withstand the harsh cold storage conditions, produce little heat in the refrigeration system thanks to the high level of motor efficiency and can be regulated to suit requirements.

Figure 5: EC fans, optimised for use with evaporators in cold storage areas.

Figure 6: Ventilated facade systems with EC centrifugal or tangential blowers.

Ventilated facade systems (Figure 6), which not only ensure the necessary exchange of air but also provide heating and cooling, are yet another example of successful conversion to EC motors. Further benefits include demand-based regulation and low noise at lower speeds. The compact design of the fans is just as important for today's planning requirements as uncomplicated plug-and-play installation.

One nuclear power station less There is no end to the list of possible examples, encompassing EC blowers in range hoods or clothes dryers, duct fans, fans in refrigerated display cases and a whole host of other applications. Common to all is a roughly 40% average reduction in power consumption on switching from AC to EC motors. Going back to the figures in our earlier example involving 25 million AC motor applications, here is another interesting thought: If all 25 million AC motors were to be replaced by EC versions and assuming a potential average energy saving of 40%, the annual saving would amount to nearly 10 TWh. The efficiency of EC fans in refrigeration, air conditioning and building systems would therefore permit an entire nuclear power station to be shut down. That would be an indisputable contribution to reducing future energy consumption.

Author is engineer Gunter Streng, Head of Development Product Division A at ebm-papst Mulfingen

You would like more information on this topic? Please address your question to: Bernd Kistner, Head of Market Management Refrigeration and Industrial Engineering, Bernd.Kistner@de.ebmpapst.com

techmag
02°2015

Imprint

ebm-papst
Mulfingen GmbH & Co. KG
Bachmühle 2
D-74673 Mulfingen
Telefon +49 (0) 7938 81-0
Telefax +49 (0) 7938 81-110
info1@de.ebmpapst.com

ebm-papst
St. Georgen GmbH & Co. KG
Hermann-Papst-Straße 1
D-78112 St. Georgen
Telefon +49 (0) 7724 81-0
Telefax +49 (0) 7724 81-1309
info2@de.ebmpapst.com

ebm-papst
Landshut GmbH
Hofmark-Aich-Straße 25
D-84030 Landshut
Telefon +49 (0) 871 707-0
Telefax +49 (0) 871 707-465
info3@de.ebmpapst.com

www.ebmpapst.com

Responsible for content:
Kai Halter

Editor:
Katrin Lindner

Layout and production:
Scanner GmbH, Künzelsau

Concept:
pr+co GmbH

Photography:
ebm-papst,
fotolia.com:
S. 5 © maho
S. 8 © ktasimar
S. 13 © Tiberius Gracchus
S. 19 © Robert Kneschke
S. 22 © Thaut Images

Print:
Druckerei Ziegler GmbH + Co. KG

FSC www.fsc.org
MIX
Paper from responsible sources
FSC® C012935