tech.mag

02/2011

NEW IDEAS AT A GLANCE

The engineer's choice

ebmpapst

Editorial

Dear customers, partners and friends of ebm-papst,

"Made in Germany" remains an important brand as before. We are helping to prove this true, since we bring the best out of products and thereby advance quality. We cannot forget about costs while doing so, which is made clear by the fact that we have now become the last Western manufacturer of compact fans.

"Our motto here continues to be: Technology saves money"

Our motto here continues to be: Technology saves money. This is proven by our GreenTech EC products, which offer you maximum energy efficiency. In St. Georgen, we are now focussing more intensely on cost-effective development in updating the compact fan product range. This is because we are aware that, particularly in the highly competitive automobile and telecommunications markets, only constant optimisation of the entire cost chain from sourcing to design to production leads to success.

To this we join the advantages of our worldwide locations: We not only produce internationally, but also develop jointly with customers across locations, tailoring precisely to their requirements. Thus we are present in the respective markets – and reap the competitive advantages for the entire world market.

We just presented a very good example of this successful combination of technology and costs at the IAA trade fair: the new electronic water pump for liquid cooling in vehicles. With this product we have entered what is for us a new market, in which intense competition prevails. We meet the challenge and even bring the customer technological advantages in the process. With a significantly improved level of efficiency, the pump provides about 50 percent higher operating pressure and therefore is particularly well suited for water cooling in hybrid vehicles.

The strategy is working out. In a variety of areas such as automobile drive engineering, over the past two years we have been able to implement numerous new and successful orders jointly with our customers. This is because our recipe of success is the same as yours: Improve technology, optimise costs – that is "Made by ebm-papst".

With this in mind, I hope that you will enjoy reading our new tech.mag, and that it will provide you with many new and efficient ideas.

Dirk Schallock
Managing Director
ebm-papst St. Georgen GmbH & Co. KG

Content

Page:

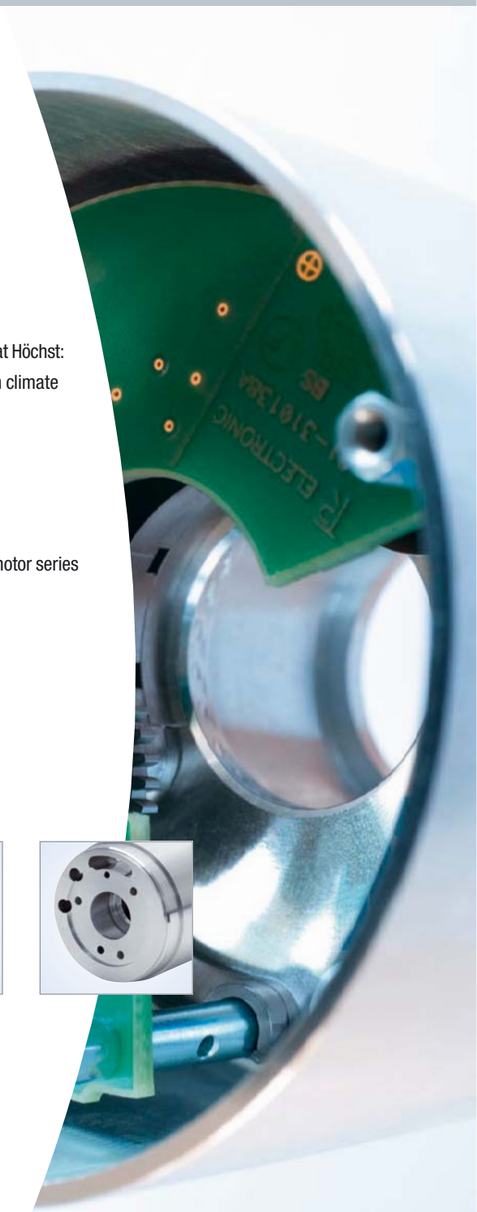

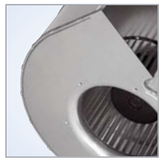

Diagonal fans make filter fans more efficient

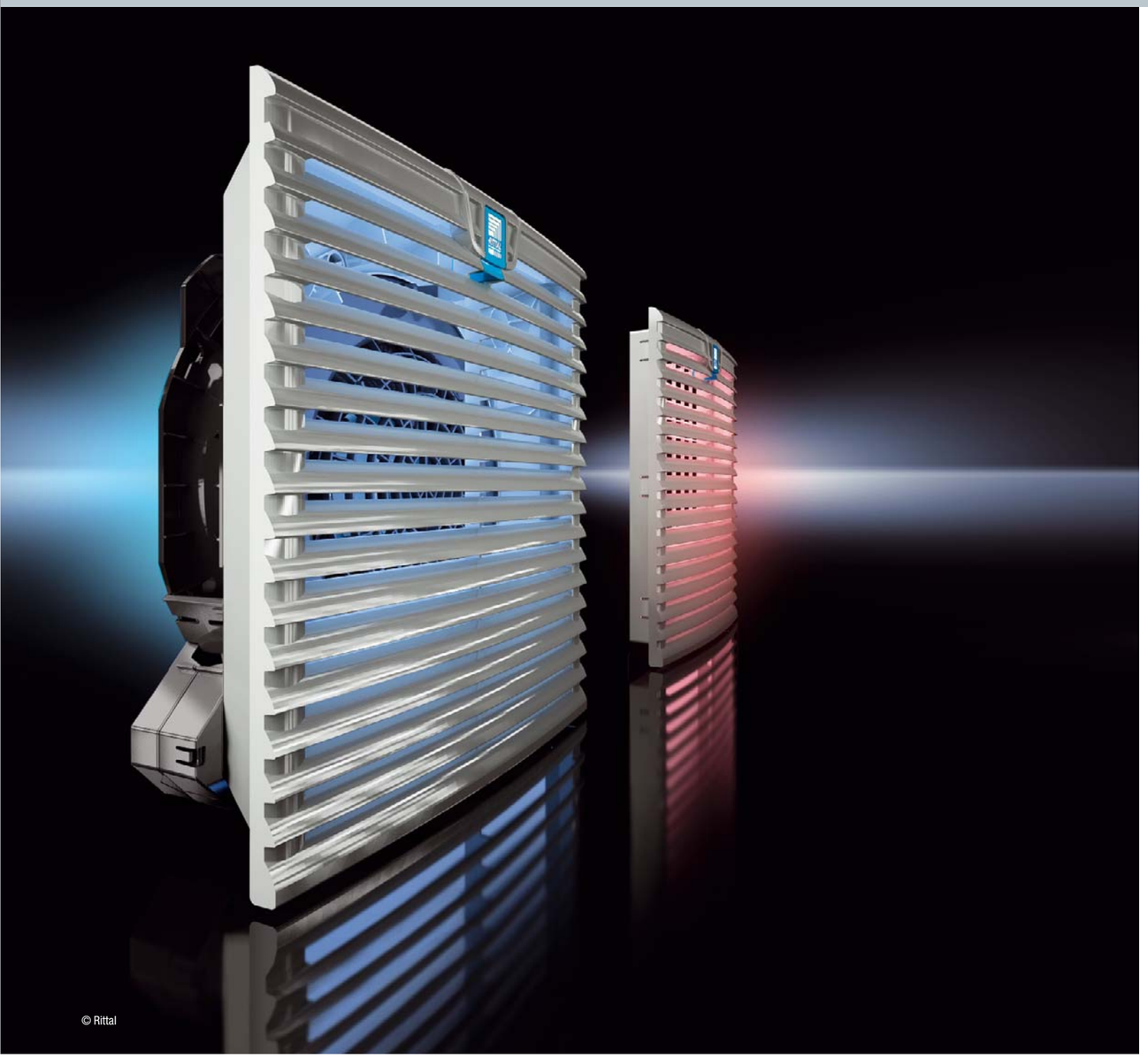

© Rittal

Filter fans are a combination of fan and dust filter. They are well suited for economically dissipating heat loads from switch cabinets or electronics enclosures. A new generation of equipment is now providing a breath of fresh air – in more ways than one – in the field of housing and control cabinet technology: with a flat design, good pressure stability, constant performance and reduced noise characteristics. Moreover, tool-free (and therefore time-saving) installation makes it convenient for the user. Diagonal fans which can be perfectly integrated into the application make an essential contribution here. These combine the characteristics of conventional axial fans with those of centrifugal fans.

To ensure that electronics work reliably, the residual heat generated from the power loss has to be dissipated as efficiently as possibly. In practical use, it soon becomes clear that there are often great differences in the performance of the filter fans used for this purpose. The strengths and weaknesses of the different fan concepts are particularly evident when there is a high back-pressure, e.g. due to a high density of components or dirt accumulation in the filter mats.

More pressure and higher air flow

Usually, filter fans employ axial fans, in which the air flows parallel to the axis of rotation of the impeller. These fans displace large volumes of air, but with low static pressure. Outside the right working range, i.e. with increasing pressure rise beyond the saddle point, the noise level of axial fans rises substantially as the air flow at the impeller shears and forms turbulence. This causes the efficiency of the fan to drop. For this reason, centrifugal fans are usually the right choice for applications requiring greater pressure stability. Here, the air flows across the impeller radially to the axis of rotation. Because the complete air flow leaves the impeller at the outer

Figure 1: New line of diagonal fans for filter fans from ebm-papst. (photo: ebm-papst)

diameter, the greater speed encountered there is fed into energy, meaning that the centrifugal impeller is able to generate a greater pressure increase. Motor and fan specialist ebm-papst has combined the benefits of these two fan concepts in a new line of diagonal fans (see Figure 1). The filter fans, which are configured for an air performance ranging from 20 to 900 cubic metres per hour, are flatter than earlier models featuring axial fans, yet they have the same installation dimensions and generate a greater air flow at higher back-pressure, with better noise characteristics and

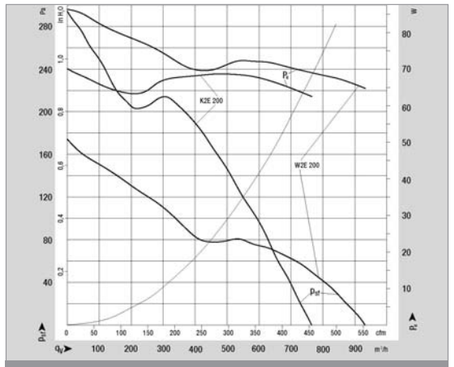

Figure 2: The characteristics curve for the diagonal fan shows a substantially higher pressure increase compared to axial fans. And yet the power input is lower despite the higher air volume. (photo: ebm-papst)

Efficient technology and innovative design:
Diagonal fans make filter fans more efficient

"Tests have shown an energy saving of up to 40 % with an unchanged air volume"

lower power input (see Figure 2, page 5). This new generation of fans has been specially developed by ebm-papst for the Rittal TopTherm line of filter fans (see Figure 3).

Figure 3: The filter fans available for an air performance of 20 to 900 cubic metres per hour are flatter than the earlier versions with axial fans with otherwise unchanged installation dimensions and substantially greater pressure stability. (photo: Rittal)

Longer service intervals and substantial energy savings

The key to this is the so-called diagonal fan employed in the new generation of filter fans. These fans are supplied by ebm-papst and occupy a position between the two fan lines described above. The principle here is for the fan blades to push both axially and centrifugally with an axial inflow. The advantage of such a configuration is that the air flow largely corresponds to that of the regular axial fan but with a greater pressure build-up. The characteristic curve is steeper and the saddle is higher. When installed under operating conditions, the air performance is more constant over a wide range, which means a number of advantages in practice.

The power loss when the filter mats are contaminated is substantially lower. This means longer service intervals, which naturally reduces costs for the user. If the fan is controlled by a thermostat, the volume flow reserve will cause the power input and the time for which the fan can run in its optimum power range to be reduced. Extensive tests have shown that energy savings of up to 40 % can be achieved with an unchanged air volume. Further savings potential is achieved if modern EC motors are employed in the fans. These work with great efficiency and are able to adjust their speed in accordance with the actual cooling requirements. This is implemented with a special controller from Argus Vision, which partially senses the temperature at a hot spot inside the switch cabinet to control the fan's air volume according to requirements. Because such energy-saving fans have the same dimensions as the AC versions of the diagonal fan, a subsequent conversion is possible without any problems.

Even air distribution and quiet running

The outlet direction on diagonal fans is not axial to the fan but rather diagonally outwards, which provides for an even air distribution in the switch cabinet or housing (see Figure 4). This effectively prevents heat pockets from forming. In addition, the fans run extremely quietly. This is due firstly to the way in which they work, and secondly to the fan impellers and housings, which have been optimised according to aerodynamic criteria and the plastic material used. In contrast to the sheet metal constructions otherwise employed, plastic parts are relatively easy to shape. While sheet metal parts can only be bent and stamped, plastics can easily be shaped into three-dimensional profiles. The plastic materials used are light, yet durable, UL-approved, flame-resistant and noise-insulating. With the new filter fans, the noise level is reduced by up to 10 dB(A) compared to earlier versions with the same air volume.

"The use of plastic material offers many advantages: light, durable, UL-approved, flame-resistant and noise-insulating"

High flexibility in assembly

Many different details have been incorporated into the mechanical, patent-protected design of the diagonal fans. Their housings consist in principle of two multifunctional shells. In one half of the housing are the inlet vents, guard grille and spacers for the filter mat. In the other half is the rear guard grille and the motor support. Between the two parts is the connector terminal with integrated wire ducting. The fan and the filter housing can be joined in four different positions thanks to the bayonet coupling. This allows cable outlet positions every 90° (see Figure 5). No extra tool is needed for this. The same thing applies to changes in the direction of air flow. Here, all the user has to do is to release the bayonet coupling on the diagonal fan, turn the fan unit through 180° and lock into place again.

This integrated system solution was developed in the space of one year, from the start of the project to the first parts being ready for series production. An essential precondition for this

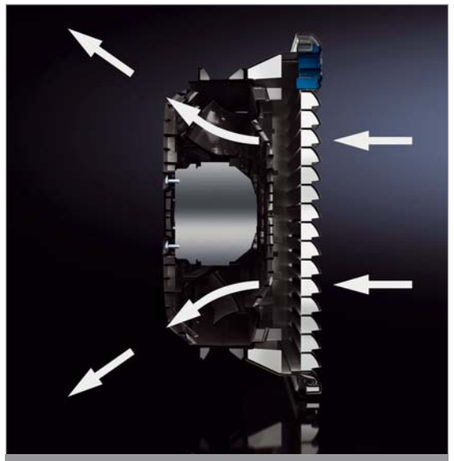

Figure 4: The diagonal output direction provides for even air distribution in the switch cabinet. (photo: Rittal)

Figure 5: Mechanical details on the fan housing make assembly easier. For example, the direction of air flow can be changed simply by turning the fan unit. No extra tools are needed to do this. (photo: Rittal)

short realisation time was the use of modern simulation tools such as CFD computation of the aerodynamically relevant components, FEM analysis of the load-bearing housing components and filling and warpage simulation of the plastic parts. But besides technical work, it was above all the outstanding and honest cooperation between customer and supplier that formed the basis for the success of the project.

Dipl.-Ing. (FH) Thomas Heli
Head of Development – Product Range EA-2
ebm-papst Mulfingen GmbH & Co. KG

Energy-efficient air-conditioning technology for a healthy room climate

Figure 1: Höchst municipal council, which runs the "New Middle School", recognised early that a very large proportion of the council's expenditure was attributable to energy costs. Consequently, the conversion was to be used to reduce costs and to exploit energy-savings potential. (photo: sfh Bildkommunikation, Bregenz/Austria)

Air-conditioning systems from Bösch in the New Middle School at Höchst:
Energy-efficient air-conditioning technology for a healthy room climate

"The air-conditioning is controlled in accordance with the current CO_2 concentration"

The climate and the ambient air quality both have a great effect on concentration, health and wellbeing, so it is important to have good ambient air, for examples in classrooms. Window ventilation used to be common practice, but is effectively banned today from the perspective of energy efficiency, meaning that climate control systems are needed that provide the necessary air exchange and optimum air-conditioning even with windows that are closed and air-tight. That by no means applies only to new buildings. Such concepts can also be integrated in conversions and renovations. The result is low energy costs and good ambient air quality. The EC fans employed in modern air-conditioning systems are high-performance and at the same time energy-efficient. The application described below provides an excellent example.

In the village of Höchst in the Austrian state of Vorarlberg, the former secondary school was restructured to the "New Middle School" in 2008. Today, some 400 pupils attend a total of 16 classes (see Fig. 1). Attached to the building is a public library and a multimedia room. Höchst municipal council, which runs the school, recognised early that a very large proportion of the council's expenditure was attributable to energy costs. Consequently, when the school was rebuilt, high priority was attached to reducing costs and to exploiting energy-savings potential.

Rebuilding as a chance to save energy

The school building was to become a low-energy building after conversion and renovation. A highly ambitious project for which the targets were an energy coefficient Ew of 40 kW/m²a and a standardised air quality with a maximum CO_2 concentration of 1,200 ppm. What do these figures mean? That's easily explained. The energy coefficient Ew is the most commonly used comparison figure for describing the thermal quality of the building shell. It tells us how much energy is needed per year to air-condition one square metre of floor space. For values less than 50 kW/m²a we speak of low-energy buildings. For values below 15 kW/m²a, we speak of passive buildings. The CO_2 content in the air has a decisive affect on personal wellbeing. At concentrations below 0.1 % (1,000 ppm, parts per million) we feel good; at values above 0.2 % uncomfortable. A maximum concentration of 1200 ppm is thus a good and realistic limit value for the air quality in classrooms.

Achieving the targets with respect to energy coefficient and at the same time maintaining good ambient air quality is only possible with an airtight building and a controlled ventilation system. Together with the company Bösch, a ventilation concept comprising centralised and semi-centralised air-conditioning units was developed. This was specially tailored to the building's conditions.

Ventilation concept adapted to the architectural features

For the air-conditioning and fresh air supply to the classrooms, a total of seven ventilation and air extraction units were installed in the ceilings of the class anteroom on each floor (see Figure 2). These compact units, which are just 360 mm flat, supply a volume flow of up to 1,500 m³/h and work with a highly efficient heat recovery system (heat recovery coefficient > 70 %) to guarantee good reuse of the heat in the exhaust air. At very low outside temperatures, the fresh air is heated up as necessary by a PTC electric air heater. Class F7 fine dust filters pursuant to EN 779 with a protection rating of more than 60 % provide for a high level of air cleanliness in the classrooms and guarantee a healthy room climate even when the quality of the air outside is poor.

Figure 2: With a depth of just 360 mm, each compact unit delivers a air flow of 1500 m³/h and works with a highly efficient heat recovery system. (photo: Walter Bösch GmbH & Co. KG)

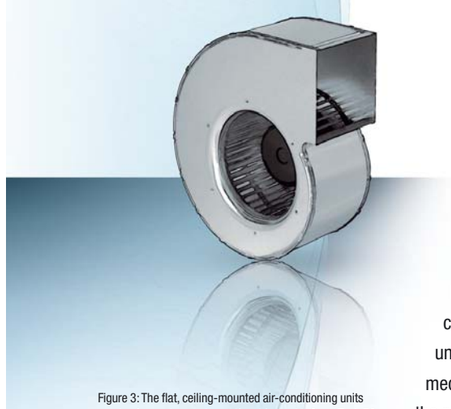

Figure 3: The flat, ceiling-mounted air-conditioning units employ forward curved centrifugal fans with GreenTech EC technology and a diameter of 225 mm from ebm-papst. (photo: ebm-papst)

Because of its different opening hours, and because of the air volume it needs on account of its size, the library is equipped with a separate, centralised ventilation and air extraction unit that delivers up to 4,000 m³/h. The media room and the other classrooms in the new extension are also supplied by their own ventilation and air extraction unit. This is configured for a maximum air performance of 7,000 m³/h. All ventilation and air-conditioning units are integrated into a single intelligent central building control system. The air-conditioning is controlled according to requirements in accordance with the current CO_2 concentration. The conversion has proven worthwhile for the village of Höchst. How much energy the system consumes was closely monitored for two full years by the independent "Energieinstitut Vorarlberg" (Vorarlberg Energy Institute). The low energy consumption figures required were confirmed.

Energy-efficient centrifugal fans in GreenTech EC technology

A decisive contribution to this success can be attributed to the design of the air-conditioning units. To generate the necessary ventilation and air extraction flow, two centrifugal fans are used in each of the units. These are highly energy-efficient and work extremely economically. They are taken from the product range of motor and fan specialist ebm-papst Mulfingen and are specially designed for use in ventilation and air-conditioning technology. Different versions ensure that the right fan solution can be found for every air-conditioning unit. For example, Bösch employs forward curved centrifugal fans with GreenTech EC technology and a diameter of 225 mm from ebm-papst in its ceiling-mounted flat air-conditioning units (see Figure 3). The characteristic features of forward curved fan blades are an especially low noise level and relatively high air flow with a low static pressure increase, plus they require relatively little installation space. Backward curved design versions provide for the

Air-conditioning systems from Bösch in the New Middle School at Höchst:
Energy-efficient air-conditioning technology for a healthy room climate

"EC motors consume substantially less energy that conventional AC drives"

necessary air flow in the centralised air-conditioning units (see Figure 4). Centrifugal fans with backward curved blades are used primarily for intake suction and do not require a scroll housing. They have a high level of efficiency. In both cases, the user benefits from the numerous advantages offered by ebm-papst's GreenTech EC technology.

Figure 4: Backward curved fans with GreenTech EC technology provide for the necessary air flow in the centralised air-conditioning units. (extract from line, photo: ebm-papst)

"Energy-saving centrifugal fans in GreenTech EC technology contribute essentially to a low energy consumption"

Quiet operation according to requirements

The EC motors that power the fans feature an integrated electronic control system that allows the speed of the fan to be adapted continuously to requirements. Demand-orientated operation can be controlled either with an analogue 0-10 V signal or via a digital RS485 interface. Because the motors also work with great efficiency, they consume substantially less energy that conventional AC drives (see Figure 5). However, these potential energy savings are realised not only when operated under full load, but also primarily when operated under partial load. When operating under partial load, EC motors lose far less efficiency than asynchronous motors of the same output.

Also very important with respect to ventilation systems in schools is the noise level, especially if the units are installed directly in front of the class anteroom. Here too, EC drives are the better choice, because the motors produce practically no noise (see Figure 6). In contrast, asynchronous motors driven by a frequency inverter, particularly under partial load, produce resonance noise that results in the typical unpleasant motor hum. This would certainly not provide a pleasant environment for the teachers and students. The students at Höchst Middle School have nothing to fear. The air-conditioning units are equipped with fans powered by pleasantly quiet GreenTech EC technology. These are practically inaudible in the classroom. The 28 dBA noise level officially specified in the classroom is observed.

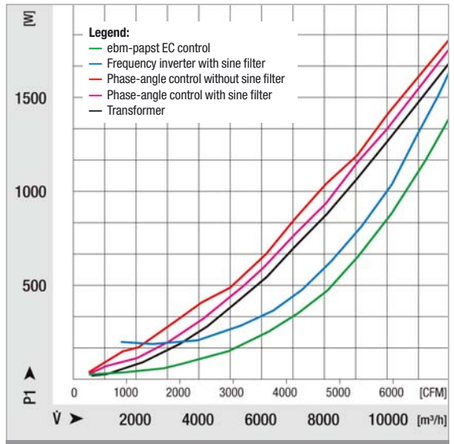

Figure 5: Because the EC motors work so efficiently, they consume substantially less energy that conventional AC drives. (photo: ebm-papst)

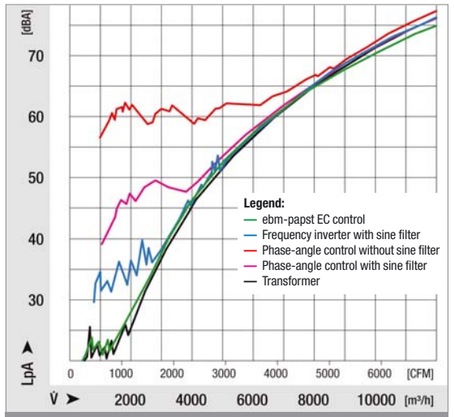

Figure 6: Noise emissions of AC and EC motors in comparison. (photo: ebm-papst)

Compact design, easy installation and long service life

Another advantage of these fans is their compact design. The electronically commutated external rotor motor is directly integrated into the impeller, which reduces the installation dimensions. A belt drive between the motor and the fan, which is commonly used otherwise, is not necessary. This reduces not only the required installation volume – always desirable for the air-conditioning units made by Bösch – but also the associated installation complexity. At the same time, fewer parts are required which are subject to wear. This keeps service costs low over the long term and thus saves money for the operator.

Ing. Thorsten Hartl
Sales Manager Austria
ebm-papst Motoren & Ventilatoren GmbH

Air-conditioning systems from Bösch in the New Middle School at Höchst:
Energy-efficient air-conditioning technology for a healthy room climate

Now also for heat output up to 1 MW:

New gas blower impresses with high power density

About Walter Bösch GmbH & Co. KG

Walter Bösch GmbH & Co. KG is based at Lustenau in the Austrian state of Vorarlberg and has been in existence for 80 years. Started as a one-man operation, the company has grown into a medium-size organisation with around 600 employee. It is one of Austria's leading companies in the fields of heating, air-conditioning and cleaning technology. Its air conditioning and ventilation systems are custom-built to cover the dehumidification and ventilation requirements of a small hotel bathroom or the air conditioning requirements of industrial production halls and clean rooms. They can be installed in the basement or weatherproof versions can be fitted on the roof. Intelligent control solutions and complete systems with integrated heating and hot-water production bear witness to the synergies between the different company divisions.

© Hoval

Now also for heat output up to 1 MW:
New gas blower impresses with high power density

"EC motors display impressive durability and greater efficiency"

At the end of the 1980s, gas blowers were already being developed for the modern heating systems known today as "condensing boilers", which have since become widespread due to their very good energy exploitation. The gas blowers are arranged upstream of a burner to blow in the gas/air mixture. Like in other applications, the trend in heating systems is also moving towards compact, space-saving devices. Gas blowers of the latest generation reflect this. Today, compact "power packs" are on the market that weigh only 20 kg, even in the heavyweight category of 1 MW heat output. These impress with their extremely high power density.

An optimum combustion process and low emissions for condensing boilers require, for example, the exact mixing ratio of gas and air. The high flow resistance of such condensing boilers means that blowers are needed with a steep-gradient pressure/air volume curve (see Figure 1). The motor and fan specialist ebm-papst Mulfingen offers suitable blower solutions meeting these requirements for a wide range of applications (see Figure 2). The single inlet radial blowers are installed in scroll housings. The gas blowers' characteristic features include high efficiency, low noise levels, high static pressure increase and a compact design, thanks to which they only require a small installation space.

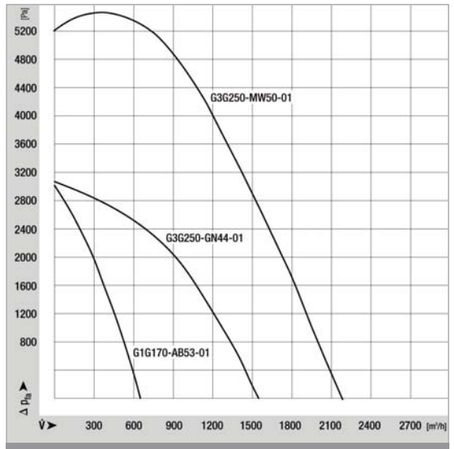

Figure 1: Typical pressure/air volume curve for gas blowers for burner controls.

The benefits can be exploited whenever high heat output is required. The successful line has therefore been extended to include a new gas blower (see Figure 3) that is suitable for heat outputs of up to approx. 1 MW. This means that the gas blowers now cover a power range from 10 kW to 1 MW. Heating applications from detached houses to multi-family homes can thus be realised, and new applications are also possible in industrial buildings.

Figure 2: Gas blowers of different power classes cover a wide range of applications. (excerpt from ebm-papst blower range)

Figure 3: Now also for heat outputs up to 1 MW: New gas blower impresses with high power density.

High-performance EC motor as driving force

The driving force behind the new gas blowers is an electronically commutated motor with three-phase power supply. The EC motors of the model series 112 which are integrated into gas blowers have already proven their worth in numerous fans and impress with their good noise characteristics, simple connections and low energy consumption. They work with an efficiency of up to 90 %, achieving substantially higher values than the asynchronous motors otherwise commonly used in this power class. The resulting energy costs are drastically lower, which soon becomes evident in practical application as the blower usually runs in continuous operation. This also applies for partial-load operation. In this range, EC motors lose far less efficiency than asynchronous motors of the same power, whose efficiency, which is already poorer, drops substantially further in the part load range.

The different curves shown in Figure 4 illustrate the power input of controlled AC/EC motors in comparison. In all speed ranges, the energy costs for EC motors is much lower that for voltage-controlled or frequency-inverter-fed asynchronous motors. At the same time, EC motors display impressive durability. Their greater efficiency does not just mean better use of primary energy. It also means that less heat is lost to the environment, which has a positive effect on the service life of the ball bearings employed.

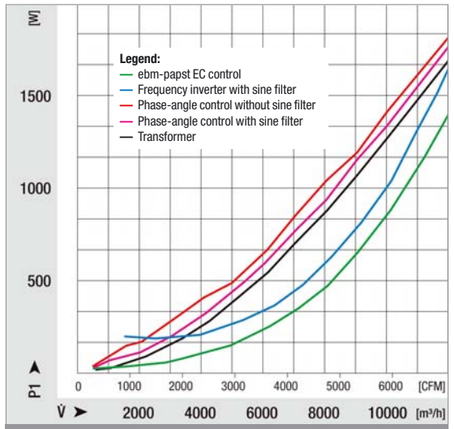

Figure 4: The different curves illustrate the power input of controlled AC/EC motors in comparison.

Quiet and easy to control

Thanks to their design principle, EC motors also run extremely quietly. This is due in part to the motors' optimised electromagnetic circuitry and to the special commutation technique. Vibration development and noise emissions are thus drastically reduced. All of the power electronics are integrated into the motors. These are actuated by the burner control, either via a PWM signal or with a linear input of 0-10 V, which then controls the blower speed according to the required heat output.

The set values for the speed and thus ultimately for the gas volume can be freely varied via the PWM input. If you need to

Now also for heat output up to 1 MW:
New gas blower impresses with high power density

"The new gas blower can be used in both domestic and industrial environments"

change the speed manually using an adjusting knob, simply connect a potentiometer. The necessary supply voltage is provided by the integrated motor electronics directly via an electrically isolated voltage output. The speed control also helps to reduce noise levels and to save energy as the blower only delivers as much gas mixture as is really needed. This constant modulation minimises above all the especially high losses during the burner start-up phase, which has the effect of reducing emissions from the heating system. Naturally, the impellers employed in the centrifugal blowers also satisfy the strictest of requirements. These have been optimised in accordance with aerodynamic criteria, so they also help to ensure smooth running and low noise emissions.

"The speed control also helps to reduce noise levels and to save energy"

Compact and just 20 kg in weight

The new high-performance gas blower measure a mere 47 cm high, approx. 43 cm wide and about 40 cm deep along the axis. And because they weight just 20 kg, they can easily be transported without needing technical aids such as fork-lift trucks. This makes installation and service far simpler. And if you want to convert the current 750 kW model to the new 1 MW gas blower, that won't be a problem. The units can be simply interchanged as the blower inlet and outlet are identical to the current model. The new gas blower works with the same impeller and has almost identical housing dimensions. Only in the axial direct does it need a little more installation space on account of the higher-performance motor. Upgrading to a greater output thus entails no major system modifications.

The new gas blower design works with speeds of up to 6,400 rpm and needs – thanks to its high power – a three-phase rated input voltage of 400 VAC. A version with a three-phase rated input voltage of 208 VAC is available for the North American market. Because the blower satisfies all relevant standards for use in both domestic and industrial environments, it also has a wide range of possible applications (see Figure 5). They can be found everywhere in heating equipment and will certainly also be found in future industrial applications, especially as suitable, easy-to-fit gas mixture solutions working on different operational principles are already on the market for the new blower.

Figure 5: The blower satisfies all relevant standards for use in both domestic and industrial environments, giving it a wide range of possible applications. The heating system illustrated here comes from the company Hoval. It represents a typical example. (picture: Hoval)

Dipl.-Wirt.-Ing. (FH) Gerhard Gauß
Head of Project Engineering, Sales Germany
ebm-papst Mulfingen GmbH & Co. KG

Extensive modules for customised drive design of new BLDC motor series

The vast multitude of possible drive applications and the huge variety of differing requirements result in great challenges when it comes to the versatility of modern drive systems. A large selection of motors with accessories was, until now, the key to tailoring drives quickly to suit customers' individual needs. A completely new approach now offers better customisation with faster availability. An entire drive range of new, electronically commutated internal rotor motors in a large variety of sizes based on the uniform principle of modular design. Furthermore all modules which are equipped with an according communicative electronics, operate using a uniform implementation and programming interface. This helps to further decrease development and maintenance costs.

Figure 1: Modular motor series ECI 63 – consistent modular design for easily tailored drive systems.

Customised drives are highly requested, and insofar as possible with uniform designs so as to minimise the stockkeeping of spare parts. Another very welcomed advantage is that it is now possible to implement extensions for new motor designs without having to make complex construction modifications to the system. In addition to these mechanical and custom-tailored characteristics, the ability to individually program the implemented drive is often requested, especially in the case of complex products or complex drive tasks. A uniform programming interface for such "communicative" designs saves vast amounts of time during the initiation period of implementation and maintenance. Drive specialist ebm-papst from St. Georgen, Germany, is now defining new standards with a modular concept for drive construction that meets these market demands. In the new series of electronically commutated internal rotor motors (ECI), drives of various performance classes with diameters from 32 to 80 mm will become available, one by one, complete with corresponding function modules. Each separate module, from the motor, to the gearboxes and brakes, to the rotary encoder and electronics, can be selected individually and combined to create the perfect system. Once chosen, all components are combined into a finished drive to meet the customer's demands (see figure 1).

Real-world applications

All motor, gearbox, electronics and accessory modules are built into uniform, economically manufactured module cases of aluminium. These modules are combined and mechanically sealed simultaneously in an ingenious process that requires just one step. As such, the drives, even in standard version, automatically have IP54 protection without the need of additional effort or expense. To keep the construction as compact as possible, the developers use a trick: Instead of giving each module a front and rear flange, they use the robustly designed intermediate flange of one module as the end flange of another. For example, while the front

New ECI drive concept based on modular design:
Extensive modules for customised drive design of new BLDC motor series

"These dynamic powerhouses reach nominal torque up to 1,000 mNm and output power up to 400 W"

Figure 2: Well thought-out design of the housing module for flexible integration of functional modules.

bearing of the motor rotor is located in its own module case, the rear side of the bearing is homed in the flange of the next module (see figure 2). This allows for easy and space-optimised integration of the brake and encoder modules with IP54. This approach reduces length considerably, with more length spared as more modules are added. To save more space, the various gearbox modules can, as necessary, be attached directly.

Powerful

To configure the entire range of diameters, from 32 to 80 mm, for optimum motor output and high efficiency, different design versions were developed for different sizes. The developers performed elaborate FEM calculations for each diameter to determine the optimum distribution of the magnetic flux density in the motor. Multi-pole motor laminations optimise power density, torque and efficiency in equal measure (see figure 3).

The first representative of the new family is the size 63 (outer diameter of the motor housing) with active lengths of 20, 40 and 60 mm. The attainable performance data are astounding: These dynamic powerhouses reach nominal torque up to 1,000 mNm and output power up to 400 W with up to 90 % motor efficiency. The available nominal voltage is between 24 and 48 VDC, depending on the design.

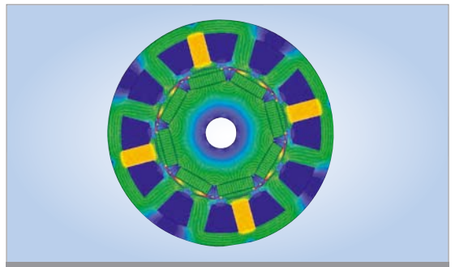

Figure 3: Systematic optimization of motor performance through elaborate FEM calculations.

A special connection technique is used so that the winding phases of the stator are through-connected to the electronics located at the motor end. This simple system provides simple and automatic assembly and reliable isolation, regardless of the quantity or lengths of the interconnected modules. For the rotor design, the neodymium magnets are inserted into pockets in the laminated iron of the rotor by using a reliable procedure. This makes them easy to install and resistant even to the toughest loads.

Auxiliary modules

The gear unit is located on the driving side of the motor

Fig. 4: The ingenious connection technology allows a flexible combination of the various modules.

module. Depending on the task, either compact planetary gearboxes or angular gearboxes can be installed (see figure 4). On the other side of the motor, many auxiliary modules can be implemented to carry out the services you need, depending on the requirements of the application. High-torque brakes or high-resolution encoders can be interconnected as integrated modules (see figure 5). Furthermore, and either as an alternative or in addition to this, it is possible to mount such options using a shaft brought out on the B-side (rear side of

Fig. 5: A high-resolution multiturn absolute encoder safely integrated in the housing module.

the motor) in open-design form (see figure 6). The modules for the integrated functional elements are always terminated with an integrated electronics module for the motor control system.

Fig. 6: Cost-saving solution for reduced requirements – open mounting of a holding brake.

Customised electronics

The concept for the design variants of the electronics module allows for up to four "performance classes". Class K1 refers to a module that contains only the Hall sensors for detection of the rotor position and is designed for external commutation. The K3 module contains a complete basic package for block commutation, as well as a closed loop speed controller and safety functions (over-current protection, locked-rotor protection etc.). Variant K4 comes with additional basic equipment. With sinus commutation based on field-oriented control, speed control down to 0 rpm and a torque controller it allows to utilise the full potential of the motor (see figure 7).

Figure 7: Electronics housing for electronics classes K1-K4 – safely sealed for protection class IP54.

As the high-end version, module K5 includes the basic features of the K4 plus extended electronics. This allows many additional control options. A CANopen communication interface with several program modules in accordance with DSP 402 is implemented. User-specific sequence programs can be created and stored via an implementation and programming tool and an interpreter that is executable within the controller. These can take over the role of a small programmable logic controller (see figure 8).

Figure 8: Electronics housing for electronics class K5 – with extensive interface and CANopen communication.

New EC motor design – Compact and efficient

The new drive concept is well suited to many areas of industrial automation, packaging and sorting machines, and applications in the textile industry. Likewise, this modular drive design can show its strengths in medical technology, laboratory instruments and many other applications. With the same basic construction, the system of this scalable and extendable range of drive services can be upgraded easily without the need for complex modifications. The programming tool, which is uniform to all versions with electronics module K5, simplifies the implementation and later maintenance tasks for the user, thereby decreasing expenses throughout the service life. The protection class of the modular drive system also enables a long service life without additional expenses even in tough environments. As such, the new drive concept is as versatile as any considerably more complex line-up of discrete individual drive modules, yet offers users and end customers substantial cost and logistics advantages.

Dipl.-Ing. (FH) Bernd-Jürgen Dietrich
Marketing Director
ebm-papst St. Georgen GmbH & Co. KG

Figure 1: Despite the integrated commutation and drive electronics, the new EC motors (right) are just as compact as conventional AC motors (left), making a simple mechanical exchange possible.

"AC2EC" – Replacement made easy:
New EC motor design – Compact and efficient

"The motor is robust, insensitive to shock and impressed with its reliability and long service life"

The efficiency of the fans used is a central issue in ventilation and air-conditioning technology. This is encouraged not only by the statutory basis created with the Energy Conservation Directive, but also by increased environmental and cost awareness on the part of users. Against this background, it is no surprise that energy-efficient EC technology is increasingly being employed in all areas of application. To offer manufacturers of ventilation and air-conditioning units the option of continuing to use conventional AC technology or switching to energy-efficient EC technology in the future, the installation conditions for both motor technologies have to be identical. A new generation of EC motors is for the first time as compact as existing AC versions and mechanically full compatible. This means that fans can employ either AC or EC technology – without having to modify the ventilation or air-conditioning unit.

"EC motors cut operating costs, reduce the impact on the environment and impress with their quiet running"

So-called "asynchronous motors" are frequently employed today to drive fans in ventilation and air-conditioning units. These AC motors are compact and simple assemblies as they are fed directly from the A/C or three-phase current supply. Neither mechanical collectors nor electronics are needed to power the rotor. They are robust and reliable. However, EC motors achieve a much higher degree of efficiency than AC motors, and this will be necessary in the near future with an eye on the requirements of the Energy Conservation Directive.

But that need not be a problem for the manufacturers of ventilation and air-conditioning units. The motors and fan specialist ebm-papst Mulfingen has developed a new generation of EC motors featuring integrated commutation and drive electronics, and which are just as compact as conventional AC motors. On both axial and centrifugal fans, the original AC motors can now be simply exchanged for a new EC design (see Figure 1). The exceptionally high efficiency of EC motors – up to 90 % – can be enjoyed without having to make design modifications to the customer's equipment. Operating costs are cut and substantially less CO_2 is generated from the very first hour of operation, reducing the impact on the environment. At the same time, the drives impress with their quiet running, which is especially beneficial for equipment used in domestic applications. The key to this is an especially low-noise commutation which is precisely adjusted to the three core electronically commutated motor.

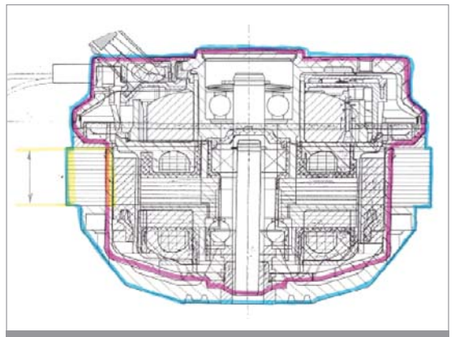

Figure 2: The development represented a great technical challenge. The necessary electronics for EC motors have to be accommodated in a limited space (blue: AC motor / red: EC motor).

Identical input and output dimensions

EC motors are, by way of their principle, synchronous motors actuated by permanent magnets. The magnetic rotor synchronously follows an electronically generated rotating field. This allows any random operating speeds to be realised, regardless of the power frequency used. The development represented a great technical challenge to accommodate the electronics needed by EC motors in the limited space available (see Figure 2). Apart from the miniaturisation and optimisation of the electronics, mechanical compatibility was also a necessity. This includes, for example, the same mounting flange design as that employed on AC motors (see Figure 3) and the complete structural shape of the motor had to be modified.

Good heat dissipation and protection rating

The new compact EC motors are based on the proven external rotor principle in which the rotor turns around the internal stator. The stator core is coated in thermoplastic, which has several different benefits in practical application. Firstly, the high-quality plastic material provides for good electrical insulation. And secondly, the ball-bearing mounting can be integrated. Panel thicknesses and separations can be varied according to design. Tolerances in the core pack, for example, can be compensated for in this way. After this, the complete winding of the sub-assembly is coated with duroplastic (see Figure 4). The single-piece rotor, which turns around the stator, has been aerodynamically optimised. Air intakes in the rotor provide for perfect heat dissipation for the stator. In conjunction with the coated stator, a high IP protection rating (IP54) is guaranteed for the motors.

Figure 3: Mechanical compatibility. The mounting area of the new EC motor (left) and that of a conventional AC motor (right) are identical.

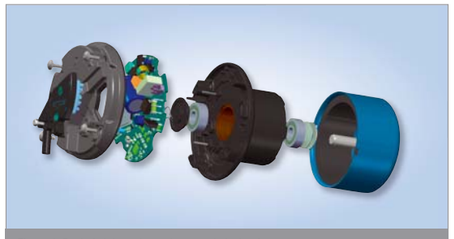

Figure 4: Coated stator, rotor and compact electronics.

The sealing of the electronics also plays an important role here. Instead of the solutions that used to be common, featuring a flange and various O-rings, the electronics case has been given an elastic sealing component. That guarantees long-term protection for the electronics. The complete motor is robust, insensitive to shock and impressed with its reliability and long service life.

Sustainable design and modular system

When designing the new EC motors, great value was attached to sustainability and to resource-conserving manufacturing. There are several details that contribute to this. The single-piece rotor with pressed-in shaft reduced the number of manufacturing steps. Multifunction components mean fewer individual parts are needed. The heat dissipation concept and a comparably compact package length also help to reduce the amount of material used. Less material input means less energy consumed during production.

More air performance and high energy efficiency

The new EC motors are currently offered in size 55 with input capacity up to 170 W. Another expansion of the series is planned. The modular concept results in a modular system that permits many different variants. This way, for example, a smaller motor can be equipped with more powerful electronics. This makes sense if more output is required with the same torque. EC motors are available as standard with two speed stages. As an option, a freely adjustable speed control with a 0-10 volt control voltage is possible, e.g. for fan operation that is precisely adapted to individual requirements. In conjunction with the aerodynamically optimised HyBlade® blades or RadiCal impeller, these fans, with GreenTech EC technology, represent an energy-efficient unit in ventilation and air-conditioning technology. It is therefore possible to make an straightforward mechanical replacement of existing fans without having to modify the customer's unit.

Dipl.-Ing. (FH) Gunter Streng
Head of Development – Product Range A
ebm-papst Mulfingen GmbH & Co. KG

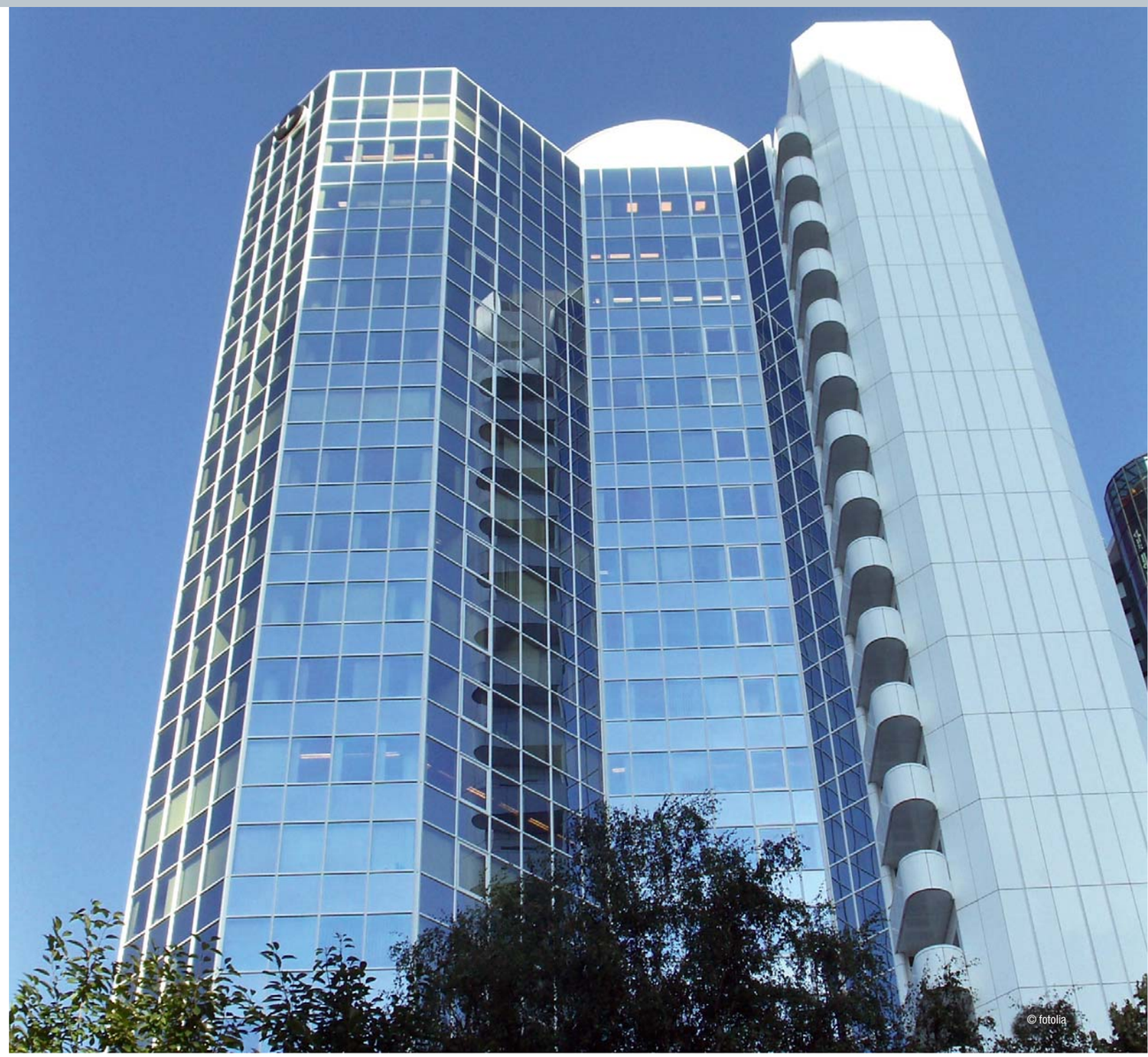

© fotolia

New Plug Fans exceed today the requirements of tomorrow:
More air performance and high energy efficiency

"Plug Fans exceed the current requirements of the ErP Directive with respect to efficiency"

Figure 1: Extract from Plug Fans series: In 12 sizes, the backward curved centrifugal fans made of welded sheet aluminium with impeller diameters of 250 to 900 mm now cover air performances up to 30,000 m³/h. (photo: ebm-papst)

For energy-efficient use in ventilation and air-conditioning technology, ebm-papst Mulfingen has developed the so-called Plug Fans series of fans with GreenTech EC technology, which has already been successfully established on the market. In order to cover higher air performance ranges, the existing range has been extended upwards (see Figure 1 and Figure 2). Now, the backward curved centrifugal fans with impeller diameters ranging from 250 to 900 mm and power output ranging from 400 watts to 6 kilowatts cover practically every feasible application in the field of ventilation and air-conditioning technology. The volume flow that can be achieved is between 300 and approximately 30,000 m³/h with the necessary pressure increase of up to 1,200 Pa. Typical applications include the cooling of large inverters in the field of photovoltaics or for cooling the generators on wind turbines. The fans are available with a special corrosion-resistant hygienic coating, enabling them to be used in hospitals and swimming pools without further ado (see Figure 3).

With the coming into effect of the ErP (Energy related Products) Implementation Directive for fans, manufacturers are required to design their products for the European market in compliance with defined efficiency standards. These standards affects all fans in the power range 125 W to 500 kW, regardless of whether or not they are used as stand-alone units or as components within another item of equipment or system (cf. box text 1, page 35). Great savings potential can be achieved with the fans employed in ventilation air-conditioning technology, for these are often run with a high operating factor. Modern fans with energy-efficient EC technology have numerous advantages here. Not only do they satisfy both current and future mandatory requirements, they actually exceed them by far, even today. This is equally beneficial to the environment and to the consumer's purse.

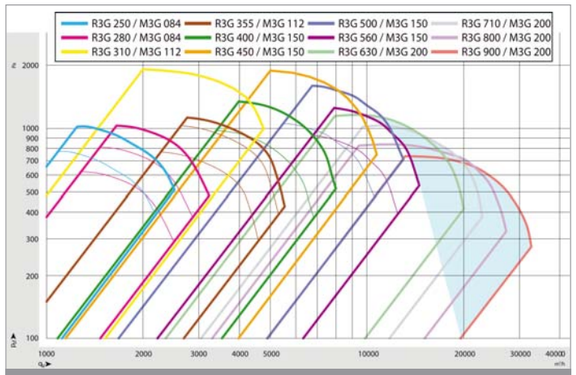

Figure 2: Extended power range, marking in blue shows the new sizes. (photo: ebm-papst)

Modern EC technology and thought-out design details

With the development of the series, the overall efficiency of the fans has been optimised with respect to the current and expected future minimum efficiency standards (see Figure 4). This was made possible by the choice of materials, by thought-out design details and by the use of the latest EC technology in the drives. Motor, electronics and impeller are optimally configured in order to achieve maximum overall efficiency and material usage, and to avoid unnecessarily large dimensions. For example, the blade geometry of the impeller with diagonal trailing edge improves the aerodynamic characteristics and the running smoothness. The same thing applies for the vent contours realised on the new series. Previously, a standard pressure tap was integrated here to regulate differential pressure via a threaded nipple. A ring circuit is possible on request. The position of the impeller on the external rotor motor has been chosen to produce both aerodynamic advantages and installation advantages.

"Motor, electronics and impeller are optimally configured"

The motors also satisfy the very highest standards. Even today, the EC drives used in the Plug Fans are just as efficient as motors of efficiency class IE4. In other words they exceed by far the current requirements of the ErP Directive with respect to efficiency (cf. box text 2, page 35). The integrated electronic control system allows their speed to be adapted

Figure 3: Plug Fans are also available with a special corrosion-resistant hygienic coating. (photo: ebm-papst)

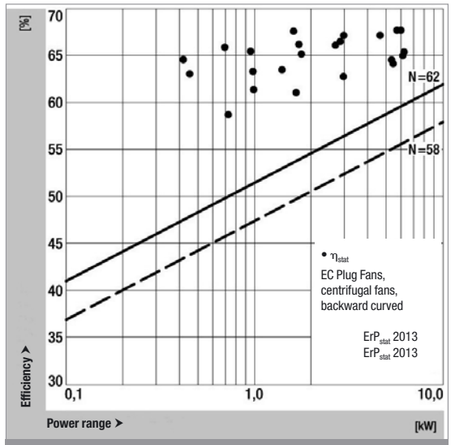

Figure 4: The efficiency plume shows that the fans exceed the required values. (photo: ebm-papst)

New Plug Fans exceed today the requirements of tomorrow:
More air performance and high energy efficiency

"Due to the elimination of the commonly used belt drive the installation volume will be reduced"

continuously to the requirements and enable them to work extremely efficiently. They thus consume far less energy than AC drives with the same air performance. However, this energy saving potential is not only realised in full load operation, but primarily when they are operated under partial load. Noise development is very important in connection with ventilation and air-conditioning units. Here too, EC drives are the better choice, because they do not produce any motor noise in a controlled state.

Compact and easy to install

Another advantage of Plug Fans is their compact design. The electronically commutated external rotor motor is integrated directly in the impeller. A belt drive between the motor and the fan, which is otherwise commonly used, is not needed (see Figure 5). This reduces the necessary installation volume. This effect is always desirable, especially in ventilation and air-conditioning units; firstly because the air-conditioning unit can be made smaller, so it needs less material, and secondly because it reduces the amount of space it needs. Machine rooms etc. can then be designed to be smaller from the very beginning. At the same time, fewer parts are subject to wear and less maintenance is needed compared to belt-driven systems, keeping service costs down in the long term. The electronics integrated in the motor also have another practical benefit. The electrical connection only needs an unscreened wire.

Plug Fans are available in various installation versions, e.g. with a "spider mounting" or with a fitted mounting plate for simple anti-vibration mounting. The power electronics integrated in the EC motors are compatible with all common supply voltages; depending on the motor type, either from 200 V to 277 V for single-phase AC or 380 V to 480 V for three-phase current supply. All versions work with a frequency of 50 or 60 Hz. Air performance and efficiency are not affected by the different frequency. In other words, the same type of fan can be used without further ado on various networks worldwide. The choice of the right fan for the application concerned is made easier by an officially certified selection program which is available either as a stand-alone software package or as a DLL module for integration in the user's specific equipment configuration programs. This can also be used to calculate the life cycle costs for the fan concerned.

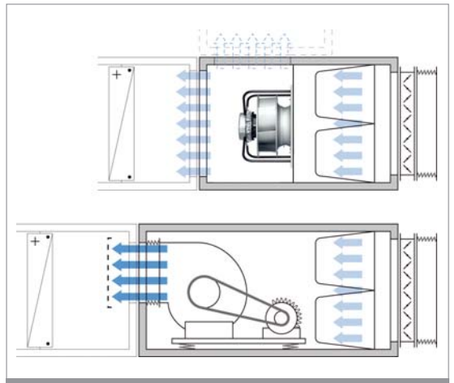

Figure 5: Save space by using EC fans (top), as opposed to systems with AC fan and belt drive (bottom). (photo: ebm-papst)

"For greater air performance it it no problem to wire several fans in parallel"

The user thus knows from the very beginning what savings potential the new Plug Fans can offer him in practical use.

ModBus interface for a simple connection to the control technology

Practical control options are a matter of course with the modern fans. The electronics integrated in the drives are not only ideally matched to the EC motors used, they can also be controlled with either a 0 ... 10 V analogue signal or digitally with a ModBus interface (greater than 500 W). This makes the connection to the higher order building control system straightforward and practical. Bus networking has important advantages, especially if more than one fan is in use:

Starting from configuration during commissioning right through to service, fault diagnosis and maintenance, working with the technical fittings is made substantially easier if the fans can be accessed from a central PC. Apart from the necessary PC software, there is now a smartphone-compatible version available that can be used to remotely (i.e. without cable connection) program, monitor and control the networked fans via a Bluetooth interface.

For maximum air performance

For greater air performance, e.g. in centralised air-conditioning units or for cooling IT centres, it is no problem to wire several fans in parallel (see Figure 6). Detailed measurements have shown that installation from a distance of about half the impeller diameter between the fans has no significant influence with respect to reducing the air volume and noise behavior.

Figure 6: Connecting several EC fan modules in parallel enables high air performance exceeding 10,000 m³/h to be achieved. (photo: Menerga GmbH)

Such combinations not only increase the air performance but also operating reliability. Should one of the fans fail, the remaining fans will compensate for the lacking air volume. In addition, smaller and lighter fans are vastly easier to install and remove than a large unit. However, this service case is unlikely to occur in practical use. Plug Fans are considered to be extremely reliable and dependable.

To keep the bearing load on the motors low and to sustainably withstand the high circumferential speeds, the impellers and their seven backward curved blades are made completely out of aluminium. The material is beneficial for the weight of the fans and at the same time offers a high measure of stability. The individual blades are welded with a continuous seam, which also benefits stability and service life. The fans are

“Plug Fans with GreenTech EC technology: durable, highly efficient and high-performance fans”

designed for a service life of more than 40,000 operating hours. That corresponds to a continuous operation of more than 4.5 years, operating under full load and at the maximum permitted ambient temperature. In partial-load operation or at low ambient temperatures, the service life is substantially longer. This Plug Fan series with GreenTech EC technology gives the user durable, highly efficient, easy-to-control and high-performance fans for many different applications in ventilation and air-conditioning technology.

Dipl.-Ing. (FH) Uwe Sigloch (left)
Head of Market Management,
Ventilation and Air-Conditioning Technology
Dipl.-Ing. Ralf Mühleck (right)
Project Engineer, Sales Germany
ebm-papst Mulfingen GmbH & Co. KG

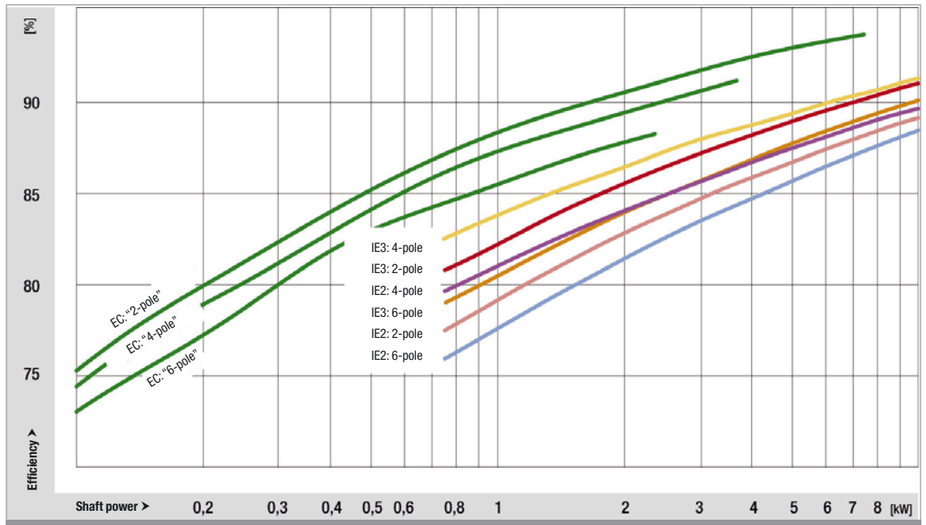

Figure 7: EC motors (green) clearly exceed the efficiency levels required by the implementation directive for AC motors (other colours). (photo: ebm-papst)

ErP Directive demands high fan efficiency

By adopting the Kyoto Protocol, the European Union has undertaken to reduce CO_2 emissions by at least 20 % by 2020. One measure to achieve this is the EuP (Energy using Products) Directive adopted by the EU in 2005, which was renamed ErP (Energy related Products) Directive in 2009 and which (in Germany) is also known under the designation “Eco-Design Directive”. A 2-stage plan has been drawn up in the EU to commit fans to strict standards so that in the future, there will be no more “energy-guzzlers” on the European market. The first stage will become effective on 1 January 2013. It is estimated that some 30 % of all fans currently on the market will then no longer satisfy European regulations. In the second stage, from 2015, another 20 % will be replaced by more efficient products. These will satisfy the specified minimum efficiency levels. The user can recognise fans that satisfy the requirements of the directive by the CE sign, on which energy efficiency is given the same significance as compliance with the low-voltage and EMC directives. Labelling in the way that washing machines, refrigerators, etc. are labelled is not planned for fans as the fan manufacturers usually have no influence on the installation conditions.

ErP Implementation Directive for motors

What applies to fans also applies in principle to electric motors. In this context there is often a lack of clarity leading to misunderstandings. The fact is that electric motors are required to achieve at least efficiency class IE2 from June 2011 in accordance with European Union Implementation Directive No. 2009/640/EC (ErP Directive). The directive defines a “motor” as an “electric single speed, three-phase 50 Hz or 50/60 Hz, squirrel cage induction motor that has 2, 4 or 6-poles, a rated voltage of up to 1000 V, a rated output between 0.75 kW and 375 kW, rated on the basis of continuous operation”. EC external rotor motors like the ones used to drive energy-efficient fans are therefore not subject to this directive. However, their efficiency is comparable with the values required by the directive. Here, it becomes clear that EC motors already substantially exceed the efficiency levels demanded (see Figure 7). This shows that EC motor technology is the better alternative when planning energy-efficient equipment and installations.

Art.-Nr. 40032-7-8811- SC-09/11-4,0'
Printed in Germany

ebm-papst
Mulfingen GmbH & Co. KG

Bachmühle 2
D-74673 Mulfingen
Phone +49 (0) 7938/81-0
Fax +49 (0) 7938/81-110
info1@de.ebmpapst.com

ebm-papst
St. Georgen GmbH & Co. KG

Hermann-Papst-Straße1
D-78112 St. Georgen
Phone +49 (0) 7724-81-0
Fax +49 (0) 7724-81-1309
info2@de.ebmpapst.com

ebm-papst
Landshut GmbH

Hofmark-Aich-Straße 25
D-84030 Landshut
Phone +49 (0) 871-707-0
Fax +49 (0) 871-707-465
info3@de.ebmpapst.com

www.ebmpapst.com

ebmpapst